NEW JAGUAR E-PACE

JAGUAR

THE ART OF PERFORMANCE

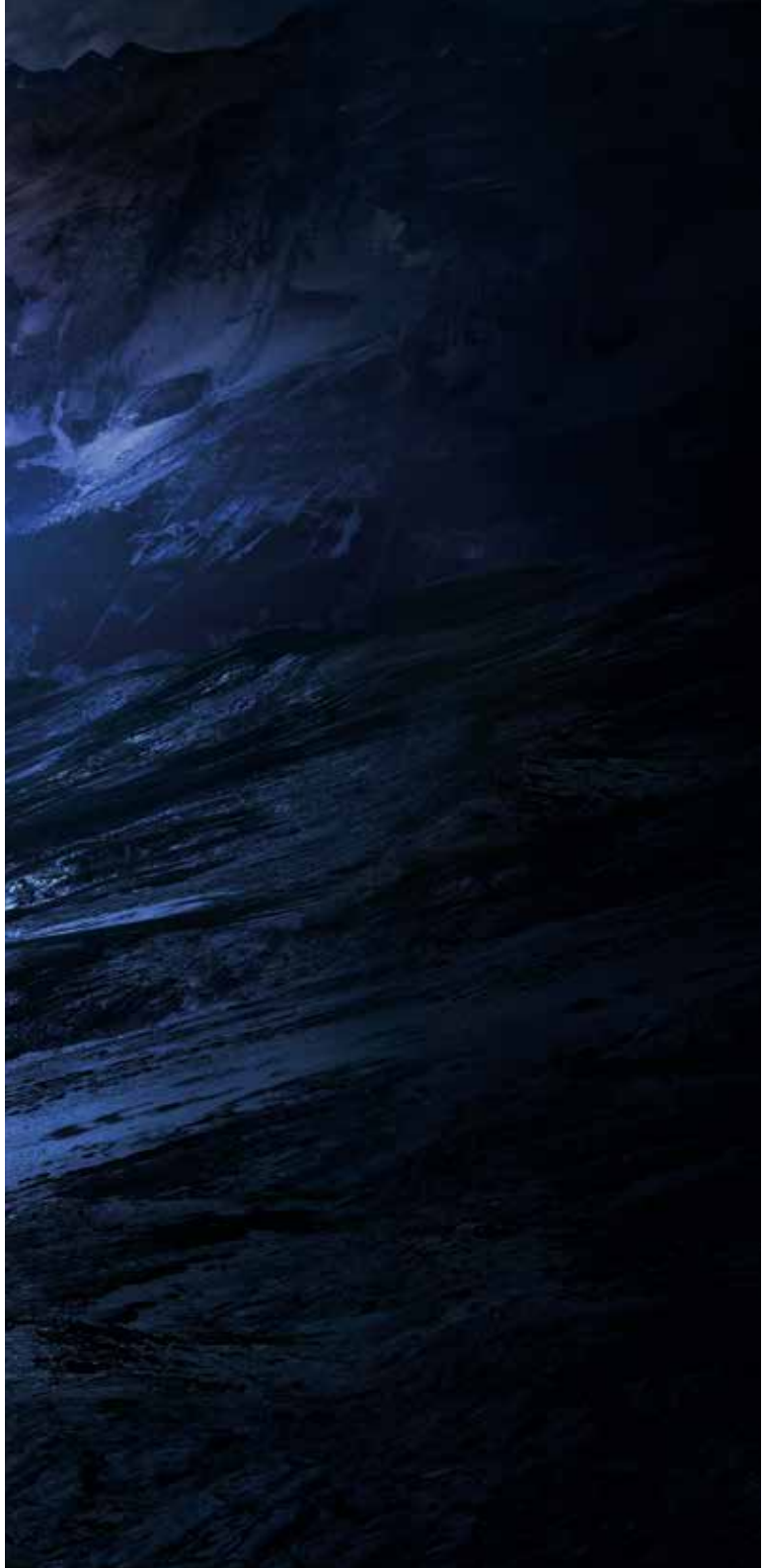

BY APPOINTMENT TO
HM THE QUEEN
MANUFACTURERS OF
MOTOR VEHICLES
JAGUAR LAND ROVER LIMITED
COVENTRY

BY APPOINTMENT TO
HRH THE DUKE OF EDINBURGH
MANUFACTURERS OF
MOTOR VEHICLES
JAGUAR LAND ROVER LIMITED
COVENTRY

BY APPOINTMENT TO
HRH THE PRINCE OF WALES
MANUFACTURERS OF
MOTOR VEHICLES
JAGUAR LAND ROVER LIMITED
COVENTRY

JAGUAR

THE ART OF PERFORMANCE

Every day we push performance to its limit. Our performance. Our cars' performance.
We innovate, we engineer, we design. We master rules and then break them.
Only to push further. Past the limits of convention. This is when performance becomes art.

Jaguar. The Art of Performance.

130 HPS

NEW JAGUAR E-PACE

New E-PACE is Jaguar's first compact SUV. It has the looks and agility to make it the most dynamic car in its class. With a driver-focused cockpit sitting at the heart of a family-focused interior, New E-PACE takes the rewarding Jaguar driving experience and adds everyday practicality. There's never been a compact SUV like this before.

CONTENTS

INTRODUCTION
Introducing New Jaguar E-PACE 06

DESIGN
Exterior 09
Interior 10

PERFORMANCE
Ingenium Engines 12
Performance Technology 15

TECHNOLOGY
Infotainment 19
Connectivity 20
Audio 24
Driver Assistance 26
Efficient Technologies 28

SAFETY
Safe and Secure 30

PRACTICALITY
A Place For Everything 34
Practically Designed 37
Take Your Whole World With You 38

SPECIFICATIONS
Step 1 – Choose your Model 42
Step 2 – Choose your Engine 46
Step 3 – Choose your Specification Pack 48
Step 4 – Choose your Exterior 50
Step 5 – Choose your Interior 58
Step 6 – Choose your Options and Jaguar Gear 66

TECHNICAL DETAILS 74

SPECIAL VEHICLE OPERATIONS 76

THE WORLD OF JAGUAR 78

VEHICLE SHOWN LEFT: E-PACE FIRST EDITION IN CALDERA RED (MARKET DEPENDENT)

VEHICLES SHOWN ARE FROM THE JAGUAR GLOBAL RANGE. SPECIFICATIONS, OPTIONS AND AVAILABILITY WILL VARY BETWEEN MARKETS AND SHOULD BE VERIFIED WITH YOUR LOCAL JAGUAR RETAILER

INTRODUCING NEW JAGUAR E-PACE

With its sculpted bonnet and muscular rear haunches, New E-PACE is a dynamic, agile SUV with the lines of a coupé. The modern interior is distinctly Jaguar with class leading interior stowage. It also features our advanced suite of infotainment and driver technologies. New E-PACE is the compact SUV as only Jaguar could have imagined it.

FIT YOUR LIFE INSIDE

E-PACE has plenty of space for everything you need. With its deep centre cubby box and sculpted door bins interior storage is the best in its class. For simple, practical loading, E-PACE's loadspace is up to 1.3 metres wide, while optional powered gesture tailgate lets you open the boot hands-free. Making it easy to enjoy your favourite activities – from cycling to swimming – the wearable and waterproof optional Activity Key allows you to keep your car key stored securely in the car. Even when you're heading off on a weekend away you can take everything you need thanks to E-PACE's towing capacity of up to 1,800kg. See pages 34-39 for details.

PERFORMANCE TECHNOLOGY

Jaguar's world-renowned performance technology helps you take everything in your stride. To give you more confidence and improved performance across an even wider range of conditions, our intuitive All Wheel Drive system transfers torque between the front and rear wheels as driving conditions dictate. For increased agility, Active Driveline[1] allows up to 100 percent of rear axle torque to be distributed to the outside rear wheel when cornering. Delivering enhanced dynamics and refinement, E-PACE has a fully independent suspension system with a sophisticated multi-link rear suspension design while Torque Vectoring by Braking[2] delivers sharper turning and more consistent road holding. The optional Adaptive Dynamics[3] system offers both precise dynamics and a supple ride, by monitoring wheel position and body movements. See pages 14-15 for details.

*When 17" alloy wheels are fitted.

[1]Only available with D240 and P300 engines. [2]Standard on AWD.
[3]Not available before April 2018. Not available on D150, Manual transmission or 17" alloy wheels.
[4]Standard on S, SE and HSE Specification Packs. [5]Market dependent.

VEHICLE SHOWN: E-PACE R-DYNAMIC SE IN YULONG WHITE WITH OPTIONAL FEATURES FITTED (MARKET DEPENDENT)

HEAD-TURNING GOOD LOOKS

For a striking on road presence, sleek LED headlights and signature LED rear lights are standard. To enhance E-PACE's appearance even further, Matrix LED headlights with signature Daytime Running Lights and 21"[1] alloy wheels are also available as options. The style extends to the driver-focused interior, which features premium quality materials. See pages 9-11 for details.

INGENIUM ENGINES

A choice of two petrol and three diesel Ingenium engines delivers efficient, refined and responsive driving. Options include the economical 2.0 litre 4-cylinder 150PS Front Wheel Drive (FWD) Turbocharged Diesel, which can achieve from 124g/km* CO_2 and 4.7/100 km. For increased performance, there's the 2.0 litre 4-cylinder 300PS All Wheel Drive (AWD) Turbocharged Petrol that can reach a top speed of 243km/h with 0-100km/h acceleration in 6.4 seconds. See pages 12-13 for details.

CONNECTED EVERYWHERE

E-PACE offers a range of features to make your life more connected on every journey. To ensure you and your passengers are linked to the world outside, our Connect Pro Pack[4] features a 4G Wi-Fi Hotspot. Making it easy to use apps from your phone on the Touchscreen, the Smartphone Pack is available as an option. With up to five USB sockets in the car, it's simple for every occupant to keep devices fully charged. See pages 22-23 for details.

DRIVER ASSISTANCE AND SAFETY

To offer reassurance and information, standard driver assistance features include Lane Keep Assist, Driver Condition Monitor, Rear Camera and Front and Rear Parking Aids. For optimum safety, E-PACE has been engineered to include a wealth of systems, including Dynamic Stability Control and Emergency Brake Assist. Helping your eyes distinguish objects more easily, LED headlights produce a highly focused beam with a quality of light that is close to daylight. Increasing pedestrian safety, E-PACE also features a pedestrian airbag[5] as standard. See pages 26-27 and 30-32 for details.

816
106 TCM

DESIGN
EXTERIOR

The Jaguar E-PACE looks unmistakably sporty, with its bold honeycomb mesh grille framed by LED headlights with signature 'J' blade[1]. To add an extra dash of style – as well as better visibility and safety at night – optional Matrix LED headlights feature distinctive front and rear sweeping directional indicators.

The dynamic roofline blends with a spoiler that sits over a steeply raked rear window to give E-PACE a distinctive profile and the lines of a coupé. For convenience with a touch of style, puddle lights[1] in the door mirrors illuminate the ground with an eye-catching Jaguar and cub design – adding a sense of occasion each time you unlock the vehicle. Optional 20"[2] and 21"[3] alloy wheels further underscore E-PACE's sporting character.

At the rear, full LED tail lights provide a truly distinctive, night time signature. Muscular haunches give an assertive stance, and the wide tailgate has been designed to allow easy access to the large and versatile loadspace.

[1]Standard on S, SE and HSE Specification Packs. [2]Standard on HSE Specification Pack.
[3]Not available before April 2018. Only available when optional Adaptive Dynamics is selected. Not available on D150 or Manual transmission.

VEHICLE SHOWN: E-PACE S IN BORASCO GREY WITH OPTIONAL FEATURES FITTED (MARKET DEPENDENT)

INTERIOR

In E-PACE every component you can see and touch has been meticulously designed to deliver a refined, tactile experience. The cockpit wraps around the driver, and the SportShift gear selector* sits at your fingertips. A 3-spoke leather steering wheel incorporates key controls for ease of use. To enhance the sportier feel, the R-Dynamic steering wheel features Satin Black gearshift paddles*.

It's the little design details that give E-PACE its unique character, like the exclusive Jaguar and cub design hidden in the corner of the front windscreen. There's also a subtle Jaguar print in the cubby box and the centre console. Complementing this, HSE models also feature beautifully detailed animal print seat labels.

*Automatic transmission only.

INTERIOR SHOWN: E-PACE S WITH OPTIONAL LIGHT OYSTER WINDSOR LEATHER SEATS WITH EBONY/LIGHT OYSTER INTERIOR AND LIGHT OYSTER HEADLINING

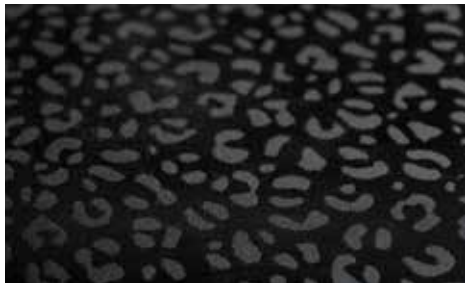

The optional auto-dimming interior rear view mirror, standard on S, SE and HSE models, has a frameless design. For added comfort there's even a front passenger grab handle on the side of the console. Choose our optional fixed panoramic glass roof to flood your E-PACE's interior with light and enhance the airy, spacious feeling. Bringing the outside in, it gives everyone superb views of the sky.

PERFORMANCE

INGENIUM ENGINES

From power and sheer driving pleasure to fuel economy and refinement, there is a range of Ingenium engines available for Jaguar E-PACE and each has been optimised for specific attributes to cater for all needs. All engines are equipped with Stop/Start technology and smart regenerative charging; this feature harvests kinetic energy from braking to charge the battery for maximum economy, especially during urban driving.

These low friction, all-aluminium engines have stiff cylinder blocks and twin balancer shafts to ensure inherently low levels of vibration, for smooth day-to-day performance. Intelligent, electronically controlled, adaptive engine cooling only engages when required – minimising fuel consumption and CO_2 emissions.

TRANSMISSIONS

To ensure that you are always in the optimum gear, maximising fuel efficiency and acceleration, E-PACE's 9-speed Automatic Transmission has nine closely spaced ratios. Gear changes are almost imperceptible and shift schedules intelligently adapt to your driving style. For even greater driver involvement and increased fuel economy, choose the 6-speed Manual Transmission[1]. This lightweight, highly advanced gearbox uses an advanced direct lubrication system to reduce friction and drag.

CLEAN DIESEL TECHNOLOGY[2]

At Jaguar, we are continually striving to reduce emissions by making exhaust gases cleaner. E-PACE diesel engines have been fitted with Selective Catalytic Reduction (SCR technology) which uses Diesel Exhaust Fluid (DEF), also known as AdBlue®. The system works by injecting AdBlue® into the exhaust system to break down nitrogen oxide (NOx) emissions into harmless water vapour and nitrogen gas, reducing the levels of NOx emitted by up to 90%.

AdBlue® is a consumable and will need to be topped up. Factors such as driving style, road and weather conditions can greatly influence consumption. Average consumption will be 800km (500 miles) per 1 litre. Your E-PACE's message centre will give you advance warning when your AdBlue® level is low and will display your remaining mileage before depletion becomes critical. For more information on how to store and top up AdBlue® please consult the vehicle handbook or your Retailer. Diesel vehicles are also fitted with a diesel particulate filter[2] which removes almost all soot particulates from the exhaust by oxidising them within the filter.

*When 17" alloy wheels are fitted.

[1]Available on D150 and D180 engines. [2]Market dependent.

DIESEL ENGINES

All Ingenium diesel engines are based around a deep-skirt aluminium cylinder block featuring thin-wall, press-fit cast-iron liners for optimum weight, surface finish and robustness. The high-pressure common rail direct fuel injection, exhaust variable cam timing and a high-efficiency water-cooled intercooler work in combination for a clean, efficient combustion. The engine features a variable geometry turbocharger that adapts to the changing flow of exhaust gases for high torque throughout the rev range and responsiveness that is uniform, progressive and reduces lag.

D150 FWD/AWD/AWD AUTO
2.0L | 4 Cylinder | Turbocharged
150PS | 380Nm | 4.7/5.2/5.6 l/100km
124*/137/147 (g/km)
Optimised for excellent fuel economy.

D180 MAN/AUTO
2.0L | 4 Cylinder | Turbocharged
180PS | 430Nm | 5.2/5.6 l/100km | 137/147 (g/km)
Optimised for a mix of economy and performance.
- Optimised injectors precisely control the amount of fuel that enters the combustion chamber for maximum efficiency.

D240 AWD
2.0L | 4 Cylinder |Twin Turbocharged
240PS | 500Nm | 6.2 l/100km | 162 (g/km)
Optimised for performance and driveability.
- The series sequential twin turbochargers deliver an ideal combination of peak power performance and superior low speed driveability.
- Includes a higher pressure common rail fuel system, increased from 1,800 to 2,200 bar, and an increased fuel injector flow rate. These combine to deliver optimised fuel economy, emissions and power delivery.
- Continuously variable swirl control energises airflow at lower engine speeds and torques to improve diesel air-fuel mixing for improved combustion, with lower emissions and faster warm up.

PETROL ENGINES

The intelligent Continuously Variable Valve Lift (CVVL) system varies the extent to which inlet valves are opened, reducing engine pumping losses. This lets the engine 'breathe' with maximum efficiency, optimising power and torque. CVVL works in combination with dual independent variable cam timing (VCT) for ultimate operating flexibility, resulting in excellent power and fuel economy across the rev range. The twin scroll turbocharger is fed by an integrated exhaust manifold which increases the transfer of energy to the turbine – significantly reducing turbo lag and improving engine response.

P250 AWD
2.0L | 4 Cylinder | Turbocharged
249PS | 365Nm | 7.7 l/100km | 174 (g/km)
Optimised for fuel economy and driveability.

P300 AWD
2.0L | 4 Cylinder | Turbocharged
300PS | 400Nm | 8.0 l/100km | 181 (g/km)
Optimised for top of the range performance.
- Featuring upgrades to the boosting system, it builds on the architecture of the 2.0 litre 4-cylinder 249PS Turbocharged Petrol engine.
- The uprated turbocharger features a high flow compressor wheel delivering 26 percent more air, enabling a higher peak power output.
- The twin-scroll turbocharger features ceramic ball-bearings which reduce friction and improves transient response.

WHEN THE FRONT WHEELS HAVE LESS TRACTION, GREATER DRIVE TORQUE IS DISTRIBUTED TO THE REAR WHEELS.

LOW TRACTION LAUNCH

ALL SURFACE PROGRESS CONTROL

PERFORMANCE TECHNOLOGY

ALL WHEEL DRIVE

For performance across an even wider range of conditions, the All Wheel Drive (AWD) system intelligently controls torque distribution between front and rear axle via an electronically controlled multi-plate clutch, which is located in front of the rear differential. Drive torque is distributed across the front and rear axle to fully utilise the available traction from all four tyres. On slippery surfaces, such as grass and snow, torque can be balanced between the front and rear wheels to maximise traction. In extreme conditions where only the front or rear wheels have traction, up to 100 percent of engine torque can be distributed to the opposite axle for optimum grip. The AWD system combines with Electronic Traction Control (ETC) to deliver a sure footed driving experience in even the most challenging situations.

ACTIVE DRIVELINE

Active Driveline[1] technology delivers even greater levels of traction, stability and composure in challenging conditions. While the system is able to fully disconnect drive to the rear wheels in relaxed driving conditions to improve efficiency, Active Driveline can seamlessly reconnect drive to the rear of the car within 300 milliseconds when the requirements for AWD are met. Where driving conditions require it, both rear clutches are fully locked to provide the same effect as a traditional locking rear differential – maximising the car's stability to increase capability.

Active Driveline also optimises traction and agility and provides rear-wheel drive handling characteristics by allowing up to 100 percent of rear axle drive torque to be distributed to either rear wheels according to available grip. The hydraulically controlled multi-plate wet clutches, act upon both the rear drive shafts. The clutches are independently controlled and supply optimal torque to each rear wheel based on measuring wheel speeds, throttle position, steering angle and vehicle rotation. So you always feel in control, a dedicated display on the Touchscreen lets you know what's happening.

LOW TRACTION LAUNCH

Providing you with optimum torque control when you move off from a standstill, Low Traction Launch[2] enhances capability in slippery conditions like wet grass, snow and ice. The system remains active until the car reaches 30km/h – then E-PACE seamlessly blends back into the selected driver mode.

ALL SURFACE PROGRESS CONTROL

All Surface Progress Control[2] (ASPC) is a state-of-the-art system that enables you to set and maintain a steady speed in challenging conditions such as slippery surfaces, including: mud, wet grass, ice, snow and dirt roads. Operating like a conventional cruise control system, it functions between 3.6km/h and 30km/h, enabling you to maintain full concentration on the road ahead.

[1]Only available with D240 and P300 engines. [2]Standard with Automatic transmission. Not available with Manual transmission.

VEHICLE SHOWN: E-PACE FIRST EDITION IN CALDERA RED (MARKET DEPENDENT)

TORQUE VECTORING BY BRAKING APPLIES BRAKE PRESSURE TO SLOW THE INSIDE FRONT AND INSIDE REAR WHEELS INDEPENDENTLY REDUCING UNDERSTEER

ADAPTIVE DYNAMICS

DYNAMIC MODE AND CONFIGURABLE DYNAMICS

CHASSIS AND DYNAMICS
E-PACE's chassis has been developed to deliver agile and refined on road dynamics. Aluminium chassis components are used to improve suspension performance by increasing stiffness and reducing unsprung mass. To increase ride comfort E-PACE has a fully independent suspension system with a multi-link rear suspension design. Reducing understeer and delivering increased agility through even the tightest corners, Torque Vectoring by Braking[1] provides controlled independent braking on the individual inside front and rear wheels.

ADAPTIVE DYNAMICS
The Adaptive Dynamics[2] system delivers both precise dynamics and a supple ride by monitoring wheel position and body movements. To do this, the system constantly analyses acceleration, steering, throttle and brake pedal activity. The electronically controlled dampers adjust 100 times a second to optimise the suspension settings and provide the optimum balance between comfort, refinement and agility at all times.

DYNAMIC MODE AND CONFIGURABLE DYNAMICS
Engaging Dynamic Mode amplifies E-PACE's sporting character. Gearshifts are faster and at higher engine speeds[3] with automatic upshifts prevented if in Manual Mode, throttle response is sharpened, the dampers are stiffened[4] and steering weighting is increased. E-PACE's instrument cluster and optional Configurable Interior Mood Lighting instantly take on a red glow.

The Configurable Dynamics system[5] allows you to personalise E-PACE's Dynamic Mode to create your perfect dynamic setup. Via the Touchscreen, driving characteristics can be changed to Dynamic or left as normal. So whatever combination of throttle sensitivity, gearbox shift points, steering weighting or damper stiffness[4] you want, Configurable Dynamics allows you to set up Dynamic Mode to suit your driving needs.

[1]Standard with AWD. [2]Not available before April 2018. Not available on D150, Manual transmission or 17" alloy wheels.
[3]Automatic transmission only. [4]When selected with Adaptive Dynamics. [5]Not available on D150 or Manual transmission.

VEHICLE SHOWN: E-PACE FIRST EDITION IN CALDERA RED (MARKET DEPENDENT)

JAGUAR

TECHNOLOGY

INFOTAINMENT

Delivering a wealth of information and entertainment, every E-PACE is equipped with our InControl infotainment system, Touch Pro. It features intuitive and advanced integrated technologies to ensure everyone can make the most of their journey.

TOUCH PRO

The standard 10″ Touchscreen at the heart of the centre console supports swipe and pinch gestures and delivers our richest ever audio-visual entertainment. To enhance the in-car experience, Touch Pro offers customisable homescreens and fast response times as well as voice control. Multi-tasking is also made easy thanks to the Interactive Side Panel. Touch Pro can be further enhanced by adding the connectivity package, Connect Pro.

INTERACTIVE DRIVER DISPLAY

The optional 12.3″ high-definition Interactive Driver Display[1] can receive and project a vast amount of driving information, entertainment and active safety data including navigation, phone and media. Its high resolution ensures the utmost clarity and its refined processing engine delivers smooth moving pin sharp graphics. To help you find your way more easily, the option of Navigation Pro enables you to display full screen navigation with 3D mapping.

HEAD-UP DISPLAY

Without distraction or the need for you to take your eyes off the road, Head-up Display is an option that presents key vehicle data such as your speed, gear position and navigation directions[2] on the windscreen. It features crystal clear full-colour graphics in high resolution, enabling you to see all driver inputs and information with ease. It can display important information from the Touch Pro Touchscreen including phone and media information such as the name of the track you might be listening to. The feature can be turned on and off dependent on driver preference.

[1]Included within HSE Specification Pack or optional. [2]When Navigation Pro is fitted.

INTERIOR SHOWN LEFT: E-PACE S WITH OPTIONAL LIGHT OYSTER WINDSOR LEATHER SEATS WITH EBONY/LIGHT OYSTER INTERIOR AND LIGHT OYSTER HEADLINING

CONNECTIVITY

InControl is Jaguar's suite of standard and optional features that connects you to your vehicle and links you seamlessly, and securely, with the outside world. There are a range of packs and options available to choose from. With a selection of apps, even when you're away from your car, some of the InControl features stay with you, making sure the Jaguar experience is more enjoyable than ever.

Search 'Jaguar E-PACE' to activate your account.

STANDARD FEATURES

PINPOINT TOUCH CONTROL
Pinpoint touch control allows you to interact with information swiftly. The Touchscreen responds in the same manner as a smartphone or tablet computer, providing multi-touch gestures such as pinch to zoom and swipe.

PERSONALISED HOMEPAGE
You can set up your homescreens the way you want them. With over 60 shortcuts and widgets, you can customise your system around the features you use most.

INTERACTIVE SIDE PANEL
A choice of side panels means you can multi-task. For example, your main screen area can be used for navigation, while the side panel provides phone controls. Simply swipe up and down to switch between multiple panels.

MULTIMEDIA
Enjoy a range of multimedia features on the Touchscreen. Connect your device and see details of playlists and music displayed by artist, album and genre. Create a queue of songs you want to play and add to the line up at any time.

ENHANCED PHONE INTERFACE
Making it easier and safer, you can call a favourite contact with a single touch. Additional functionality includes direct access to voicemail, conference calling and homescreen integration.

VOICE RECOGNITION SYSTEM
So you can complete tasks without taking your eyes off the road, E-PACE offers intelligent voice recognition. For example, 'Tune to 97.9' or 'Call home'.

REMOTE[1]

Remote provides information on your vehicle and enables you to interact with it remotely. Compatible with most smartphones, Android Wear™ or the Apple Watch®, this service includes:

- Remote Lock/Unlock – Lock or unlock your doors remotely with the click of a button. Simply press the 'lock' button on the Vehicle Security screen of the Remote smartphone app to single lock the doors, arm the alarm, fold in the wing mirrors[2] and close the windows. Press the 'unlock' button to unfold the wing mirrors, turn on the dipped headlights and cause the hazard lights to flash twice.
- Remote Climate – Prepare your E-PACE in advance by pre-heating or pre-cooling the cabin, so that you and your passengers are comfortable from the moment you step inside.
- Beep/Flash – This feature turns on your Jaguar's hazard lights, dipped headlights and sounds an audible alert to help you locate your vehicle in a crowded car park.
- Journey Tracking – This opt-in feature can automatically record your journey history including your route and mileage statistics. This information can be exported by email to use for expense reporting and can be imported to a spreadsheet.
- Vehicle Status Check – Check current fuel level and range, and status of door and window position and locks. See the last parked location of the vehicle and find your way back to it with on-foot directions.

Jaguar Optimised Assistance – You can make a direct call to the Jaguar Assistance team by pressing the button on the overhead console or from the Assistance screen within the InControl Remote smartphone app.

SOS Emergency Call – In a more serious incident, SOS Emergency Call will automatically connect you to the emergency response team who will notify the emergency services to your location.

[1]Remote contains subscription services that can be extended after the initial term advised by your Jaguar Retailer.
[2]When power fold mirrors are specified.

InControl Apps will need to be downloaded from the Apple/Play Store.

InControl features, options and their availability remain market dependent – check with your Jaguar Retailer for local market availability and full terms. Information and images displayed in relation to the InControl technology, including screens or sequences, are subject to software updates, version control and other system/visual changes depending on options selected. Mobile network connectivity cannot be guaranteed in all locations.

OPTIONAL FEATURES

NAVIGATION PRO[1]
Standard on S, SE and HSE, Navigation Pro allows you to save your favourite places, use pinch and zoom gestures for simple map exploration and display a choice of either 2D or 3D crystal clear map graphics. Navigation Pro functionality is further enhanced by the Connect Pro Pack.

CONNECT PRO PACK[1] [2]
Connect Pro consists of a 4G Wi-Fi Hotspot and Pro Services. It's designed to enhance your in-car and out-of-car experience, ensuring you and your passengers enjoy the journey whilst remaining connected to the world.

4G Wi-Fi[1]
The 4G Wi-Fi Hotspot provides in-car access to the Internet, enabling up to eight wireless devices to be used simultaneously in the car. Passengers can connect through the vehicle's wireless network to surf, work, update social media and stay entertained throughout the journey.

PRO SERVICES[1]

- Real Time Traffic Information – Uses live traffic data feeds to give you the most accurate picture of what the traffic is like on the way to your destination.
- Online Search – Wherever you are, you can search the surrounding area for places of interest. The system can access expert destination information, travel tips and inspiration as well as online travel reviews of the local area.
- Planning Routes and Door-to-Door Routing – Before setting off, use the Route Planner app or online to search, save locations or set your destination. The app uses the Cloud to send your destination automatically to your vehicle's navigation screen. Once you've parked, the Route Planner app will guide you to your destination – a true door-to-door experience which includes public transport options.
- Share ETA – You can share your estimated time of arrival so your selected contact(s) will know exactly when you will arrive, as calculated by the navigation guidance system. If you're running late, Share ETA can then send automatic updates via text messages or email, without any further action from you.
- Satellite View – When you want to get the context of your surroundings from overhead, simply switch to satellite view.
- Commute Mode – Allows the system to learn your commutes and automatically advises you of the expected journey time based on live and historical traffic movements without you having to input a destination. The system learns the routes you take for a given destination and then advises which of those is the quickest. The feature can be turned on and off dependent on driver preference.
- Parking Service – As you approach your destination, you can see where parking is available. Simply tap on your preferred car park and the navigation system updates to direct you to it.
- Online Routing – While you're on your way to a destination the system monitors live traffic conditions and takes into account typical traffic patterns for that time of day, keeping you on the optimum route.
- Safety Cameras – Alerts you to the location of accident black spots monitored by safety cameras.
- Fuel Prices – When you're going to fill up, the Fuel Price service not only finds filling stations along your route, it also enables you to compare fuel prices so you can keep your costs down.

InControl Apps will need to be downloaded from the Apple/Play Store.

InControl features, options and their availability remain market dependent – check with your Jaguar Retailer for local market availability and full terms. Information and images displayed in relation to the InControl technology, including screens or sequences, are subject to software updates, version control and other system/visual changes depending on options selected. Mobile network connectivity cannot be guaranteed in all locations.

SMARTPHONE PACK[1]

By screen sharing with E-PACE's infotainment system, the optional Smartphone Pack helps you stay safely connected to your smartphone even while in the car. Featuring Jaguar InControl Apps technology, the Smartphone Pack allows vehicle-optimised apps on your Android™ or Apple® smartphone to be controlled through the Touchscreen, including your contacts, calendar and music player, via a USB cable. You can also download third-party apps offering a vast range of services. Applications include:

- Spotify[3] – Access a library of more than 30 million songs with this seamlessly integrated app. Featuring all the same intuitive functionality as the Spotify smartphone app, you can search songs, stations and recommendations, create playlists and access your music in offline mode. Simply log in using your existing Spotify Free or Spotify Premium account.
- Tile[4] – Helps you find lost or misplaced items in seconds. Attach a tiny Bluetooth tracker Tile to your keys, wallet or bag. The easy-to-use Tile app can then help you find these items should they be misplaced. The app is accessible any time through your vehicle's Touchscreen, allowing you to make sure you have everything you need with you, before you set off on your journey.

SECURE TRACKER[5]

Uses tracking technology to alert you to an attempted theft, and signals your vehicle's location to the relevant authorities, for a timely recovery.

[1]Standard on S, SE and HSE Specification Packs.
[2]Certain features require an appropriate micro SIM with a suitable data contract, which will require further subscription after the initial term as advised by your Jaguar Retailer.
[3]Please check App Store and Google Play for availability.
[4]Bluetooth tracker tiles must be purchased separately. 2016 Tile Inc. and the Tile design are trademarks of Tile, Inc.
[5]Secure Tracker will require further subscription after the initial term as advised by your Jaguar Retailer.

iPhone® is a registered trademark of Apple Inc., registered in the US and other countries.

Please ensure iPhone compatibility is reviewed with your local Jaguar Retailer.

AUDIO

A vehicle's cabin is the ideal place within which to experience your personal choice of music and Jaguar E-PACE has the option of three different audio systems to bring your music to life:

JAGUAR SOUND SYSTEM
Excellent acoustic range through six speakers.

MERIDIAN™ SOUND SYSTEM[1]
Great definition, crystal clear highs and full, deep bass – delivered through the careful arrangement of 11 speakers including a dual channel subwoofer.

DIGITAL AUDIO BROADCAST (DAB) RADIO[2]
The option of DAB radio technology offers improved sound quality, a wide choice of stations and live text information about the station, show and song you are listening to.

MERIDIAN SURROUND SOUND SYSTEM[2]
All the fullness and clarity of a live performance delivered through an arrangement of 15 front, side and rear speakers including a dual channel subwoofer – seamlessly brought together using Trifield™ technology. Exclusive to Meridian, Trifield perfectly blends the centre and surround channels with left and right channels ensuring an optimum, consistent sound experience for each passenger.

[1]Standard on SE and HSE Specification Packs. [2]Optional.

MERIDIAN

Formed in 1977 in Cambridgeshire, England, Jaguar's audio partner Meridian has pioneered many firsts including active speakers and the world's first digital surround sound processor. Meridian's audio technology input has helped ensure that Jaguar E-PACE is the most superb space within which to experience sound. Meridian Cabin Correction technology was utilised to analyse cabin shape, acoustics and resonance characteristics in order to help remove unwanted sounds. The advanced algorithm ensures that the rhythm, punch and timing of any piece of music are heard precisely how the artist intended, providing a consistently exceptional quality audio experience for all passengers in the vehicle.

	UNIQUE MERIDIAN TECHNOLOGY	SPEAKERS	WATTS
JAGUAR SOUND	N/A	6	125
MERIDIAN™ SOUND	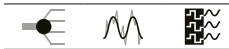	11	380
MERIDIAN™ SURROUND SOUND		15	825

DIGITAL SIGNAL PROCESSING

Brings all elements of the audio system together as one, for performance that would otherwise require significantly larger speakers.

MERIDIAN CABIN CORRECTION

The advanced algorithm of Meridian's Cabin Correction tailors the sound experience to the precise acoustics of E-PACE's interior.

MERIDIAN DIGITAL DITHER SHAPING

To maintain the quality of musical recordings, they are converted into a common digital format. Meridian Digital Dither Shaping ensures that digital signal conversions are made smoothly and seamlessly, preserving the finest details of the audio performance. The result is authentic musical conversion, evoking the emotions of the original recording.

TRIFIELD

Exclusive to Meridian, Trifield blends the centre and surround channels seamlessly with left and right channels, delivering a consistent, concert-like experience for all occupants.

Meridian is a registered trademark of Meridian Audio Ltd.
Trifield and the "three fields" device is a trademark of Trifield Productions Ltd.
Features and their availability may differ by vehicle specification and market.

DRIVER ASSISTANCE

MAKING DRIVING EASIER

From negotiating city traffic or the motorway, to providing additional safety for you and your passengers, there's a wealth of innovative technologies available; either as standard, optional or as part of an optional pack. Whichever you choose, you'll find every single feature has been designed and engineered to heighten your enjoyment of the vehicle.

Search 'Jaguar E-PACE Driver Assistance' for more details.

Adaptive Cruise Control with Queue Assist

STANDARD FEATURES

- **Emergency Braking** (see page 30)
- **Lane Keep Assist** detects when your vehicle is unintentionally drifting out of your lane, and gently steers you back.
- **Driver Condition Monitor** detects if you're starting to feel drowsy and gives you an early warning when you need to take a break.
- **Cruise Control and Speed Limiter**
- **Front and Rear Parking Aids**
- **Rear Camera**

DRIVE PACK[1]

Making every journey safer and more relaxing. The Drive Pack includes:

Adaptive Cruise Control with Queue Assist will keep your vehicle a safe distance from the one in front should it slow or stop when you're cruising on the motorway or travelling in slow-moving traffic. Should the vehicle in front stop completely, your vehicle will come to a smooth halt. Once the traffic moves, simply touch the accelerator and Adaptive Cruise Control will resume following the car in front. The system can be activated from 16km/h up to motorway speeds.

High-speed Emergency Braking detects when a potential frontal collision with another vehicle may occur and displays a forward alert to warn the driver to brake. If the driver doesn't react, the car will deploy the brakes in order to reduce the severity of the possible impact. High-speed Emergency Braking is ready and active from 10km/h to 160km/h.

Blind Spot Assist alerts you to vehicles in, or quickly approaching, your blind spot. When a vehicle is detected, a small warning light will illuminate in the corresponding wing mirror. If you indicate in the direction of the obstacle, the warning light will flash to highlight potential danger. If you continue to commence changing lanes, this system will also provide precisely calculated steering torque – guiding your car safely away from the approaching vehicle.

Rear Traffic Monitor

360° Surround Camera

PARK PACK[2]

The optional Park Pack enables you to park and manoeuvre safely and securely in and out of tight spaces and into traffic that is obscured by buildings or other vehicles. It features:

Rear Traffic Monitor is particularly useful when reversing out of a parking bay. The system warns you of vehicles, pedestrians or other hazards approaching from either side of your vehicle. It will alert you with both audio and visual warnings so you know what's behind you even when the view is obstructed.

Park Assist makes parallel and perpendicular parking easier than ever by steering your vehicle into a suitable space. You just have to select the appropriate gear and control the vehicle's speed with the brake and accelerator pedals. Graphics and notifications guide you through the manoeuvres. Park Assist will also steer you out of a space, taking all of the stress out of parking.

360° Parking Aid gives you complete confidence when manoeuvring in tight spaces. Sensors located around the car are automatically triggered when Reverse is selected, or can be manually activated, with a graphic appearing on the Touchscreen showing an overhead view of the vehicle. As you park, the Touchscreen display and audio feedback indicate how close you are to obstacles.

OPTIONAL FEATURE

360° Surround Camera[3] uses four digital cameras discreetly placed around the vehicle, providing a 360° overhead view on the Touchscreen. With the capacity to display several different views at the same time, this helps with various manoeuvres from parking by a kerb, to getting in and out of tight spaces and junctions. The integrated cameras also provide assistance when towing.

[1]Standard on SE and HSE Specification Packs. Only available when optional auto-dimming power fold door mirrors are fitted. Automatic transmission only.
[2]Standard on S, SE and HSE Specification Packs. [3]Only available when optional auto-dimming, power fold door mirrors are fitted.

VEHICLES SHOWN: E-PACE R-DYNAMIC SE IN YULONG WHITE WITH OPTIONAL FEATURES FITTED (MARKET DEPENDENT)

EFFICIENT TECHNOLOGIES

SUSTAINABLE CONSTRUCTION

Jaguar Land Rover are committed to producing vehicles that use more sustainable materials, produce less waste and use fewer natural resources as part of our approach to sustainability excellence. E-PACE's development process has included a full life cycle assessment and has been designed to be 85 percent recyclable/re-usable and 95 percent recoverable at the end of the vehicle's life.

Recycled materials have been used in E-PACE wherever possible. Each car contains up to 10kg of recycled plastics, which is the equivalent of 769 small plastic water bottles. The use of recycled material in E-PACE means that approximately 6,290 tonnes of plastic are diverted away from landfill over its entire lifecycle. Parts containing recycled plastics include – the floor console base, wheel arch liners, and junction box covers.

ENGINE MANUFACTURING CENTRE

Jaguar Land Rover's Engine Manufacturing Centre, where all of E-PACE's engines are developed, has been built to the highest environmental standard (BREEAM Excellent) and features the largest rooftop solar panel installation in the UK. Comprising no fewer than 22,600 individual panels, which are capable of providing up to 6.2MW (enough energy to power 1,600 homes), the panels generate more than 30 percent of the site's energy, reducing the plant's CO_2 footprint by over 2,400 tonnes per year.

ADVANCED AERODYNAMICS

E-PACE's streamlined shape navigates air around the rear wheels to reduce turbulence. The smooth underfloor has been honed through exhaustive testing to perfect airflow efficiency. 17" aero wheels are designed to push through the air with less resistance.

Helping E-PACE cut through the air and improve fuel efficiency, lower bumper intakes optimise airflow past the front wheels, by feeding air to the inner wheel arch from ducts in the front spoiler. In the upper and lower front grille, two intelligent Active Vanes open when necessary to let in cool air, but whenever possible they shut.

To reduce drag, which in turn reduces CO_2 emissions, an aero blade below the rear bumper helps redirect air away from the rear of the car. It also helps clean your rear windscreen and lights.

ECO MODE

Eco Mode encourages fuel-efficient driving by reducing throttle sensitivity, selecting more economical engine mapping and, on manual vehicles, advising of gear shifts. It also reduces fuel consumption by minimising the energy demands placed on the engine by climate control and audio systems. A display on the Touchscreen provides vehicle data and driving tips.

INTERIOR SHOWN: FEATURES ECO MODE

DRIVING STYLE
Fuel efficiency
Driving Score 99%
14:56
History
4G
High Street, Kensington
0.8km 14:58
5.0
4.8
4.8
Avg. Fuel 5.6 l/100km
Avg. Speed 70 kmh
Duration 00:11:32
Distance 7.1 kilometres
MAX A/C
A/C

SAFETY

SAFE AND SECURE

Designed for optimum safety, E-PACE has been engineered to include a wealth of features not only to protect you and your passengers, but to actively help prevent accidents from happening. Sure-footed All Wheel Drive (AWD) capability helps you stay firmly planted on the road, whatever the weather or environment throws at you.

Search 'Jaguar E-PACE Safety' for more details.

Dynamic Stability Control (DSC) monitors E-PACE's dynamic behaviour, intervening to maximise vehicle stability. DSC reduces engine torque and applies braking to the appropriate wheels to correct the vehicle's direction of travel by counteracting understeer or oversteer.

Electronic Traction Control (ETC) optimises traction and stability by controlling wheel spin. The ETC system reduces torque to the spinning wheel, then applies braking to the wheel, if required.

Engine Drag Torque Control (EDC) mitigates the chance of wheel lock-up caused by strong engine braking in slippery conditions. It acts by briefly increasing torque to the driven wheels as appropriate.

Hill Start Assist (HSA) ensures you do not roll backwards as you pull away on an incline.

Cornering Brake Control (CBC) automatically varies the braking force to each wheel when the vehicle's brakes are applied around a corner and the limit of grip is reached. The system will prevent the vehicle's wheels from locking up and skidding in this event through varying the braking force applied to each wheel.

Roll Stability Control (RSC) is integrated with DSC to reduce the possibility of rollover, while providing agility and ability to steer around obstacles. It monitors the vehicle motion and cornering forces to detect any potential risk of rollover. When risk is detected, braking is applied to the outside front wheel to reduce forces which contribute to rollover.

Emergency Brake Assist (EBA) understands when you apply the brakes quickly but without the necessary force to maximise stopping performance. It therefore boosts the brake pressure through the ABS pump to ensure you stop in time. To help reduce the risk of a collision, the Emergency Stop Signal System automatically activates the hazard warning lights during emergency braking.

Anti-lock Braking System (ABS) allows the vehicle to maintain traction with the road surface whilst braking and prevents wheels from locking – thereby retaining the vehicle's ability to steer. The system helps to shorten the braking distance.

Electronic Brake-force Distribution (EBD) automatically varies the braking force to each axle in order to minimise stopping distance, while still maintaining stability and the vehicle's ability to steer.

Emergency Braking can help to prevent collisions with other vehicles or pedestrians. If a potential frontal collision is detected, a warning is displayed giving you time to take action. A camera at the front of the vehicle monitors at speeds from 5km/h to 80km/h for frontal collisions and 5km/h to 60km/h for pedestrians. If a collision is still anticipated and you have taken no action, this system will apply the brakes to help reduce the severity of the possible impact.

Emergency Brake Lights (EBL) are activated through the hazard warning lights to alert vehicles behind you in the event of sudden braking.

*Market dependent.

VEHICLE SHOWN: E-PACE R-DYNAMIC SE IN YULONG WHITE WITH OPTIONAL FEATURES FITTED (MARKET DEPENDENT)

ISOFIX AND AIRBAGS
To improve safety, two ISOFIX points for baby/child seat restraints are fitted on each side of the rear seats and a comprehensive system of six airbags including driver and passenger airbags, side curtain and thorax are standard.

PEDESTRIAN AIRBAG AND DEPLOYABLE BONNET*
Sensors in the bumper trigger an airbag under the bonnet in the event of a collision. This pops up the bonnet, deploying an exterior airbag to protect pedestrians or cyclists from contact with the windscreen.

PRETENSIONERS
Keeping you and your family safe if you're ever in a collision, seatbelt pretensioners activate within a fraction of a second. Sudden deceleration triggers a piston in the seatbelt mechanism to almost instantaneously tighten the belt and pull the occupant into the seat.

SAFETY CELL
Designed for optimum safety, E-PACE's ultra-high-strength steel safety cell forms a rigid cage around you and your passengers.

BRIGHTER LIGHTS, SAFER NIGHT-TIME DRIVING

E-PACE features all-round exterior LED lighting as standard. LED lights are designed to last the lifetime of the vehicle and are more fuel-efficient as they use less energy. The quality of light produced is closer to daylight conditions, so driving at night becomes less tiring.

The optional levels of headlight feature the distinct exterior graphic of the signature Daytime Running Lights[1] (DRL). When indicating, optional Static Cornering Lights[2] which operate at speeds less than 70km/h, illuminate the road or driveway you are turning in to. Driving at night is made easier by the optional Auto High Beam Assist[3] (AHBA) which detects lights ahead and automatically dips the main beam for oncoming traffic.

Optional Matrix LED headlights enable an adaptive driving beam. By splitting the main beam into vertical strips, the adaptive beam maximises the number of high beam sections around oncoming traffic for ultimate visibility, whilst casting a shadow in front of oncoming vehicles to prevent dazzling. The adaptive beam is also able to optimise the light distribution to suit the driving conditions of town, country, motorway or bad weather. Front and rear Animated Directional Indicators, which reduce the time it takes other road users to recognise the intended direction of travel, are available with optional Matrix headlights.

Search 'Jaguar E-PACE Safety' for more details.

HEADLIGHT ARCHITECTURE

HEADLIGHT CASING

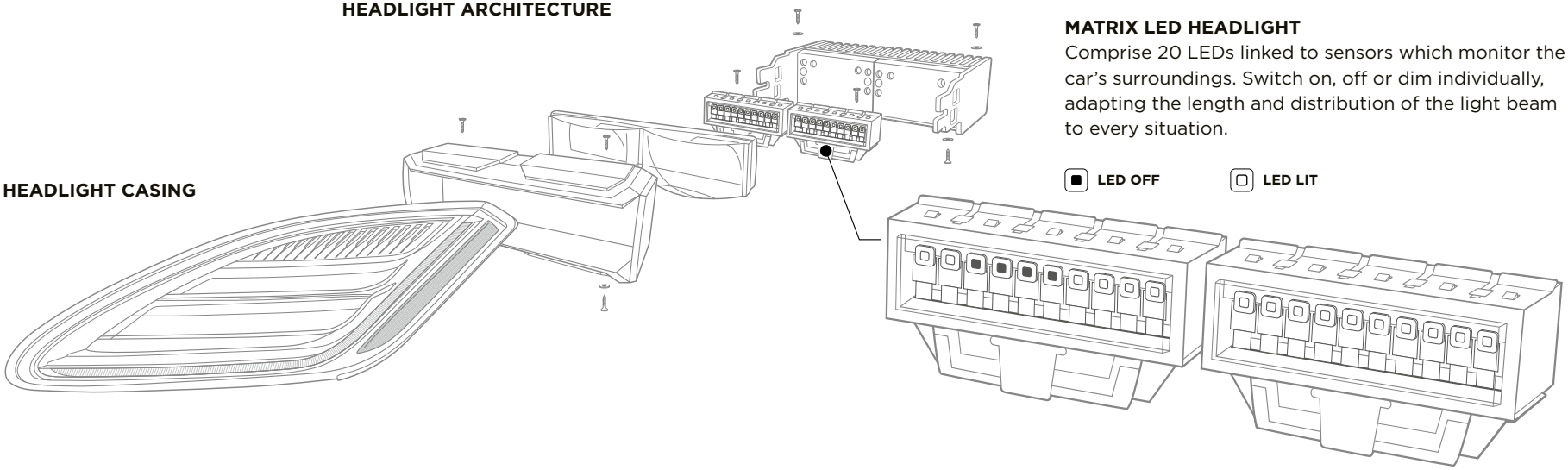

MATRIX LED HEADLIGHT

Comprise 20 LEDs linked to sensors which monitor the car's surroundings. Switch on, off or dim individually, adapting the length and distribution of the light beam to every situation.

LED OFF **LED LIT**

[1]Standard on S, SE and HSE Specification Packs. [2]Standard with Matrix LED headlights. [3]Standard on SE and HSE Specification Packs.

VEHICLE SHOWN: E-PACE S IN BORASCO GREY WITH OPTIONAL FEATURES FITTED (MARKET DEPENDENT)

106 TCM

PRACTICALITY
A PLACE FOR EVERYTHING

E-PACE has class leading interior stowage. The deep stowage in the centre console features removable cupholders to provide a highly flexible space, suitable for smaller tablets or four 75cl bottles which can be stored flat. Inside the console, a 12V socket and two USB sockets are available for charging, while the rear of the centre console has three optional USB sockets for passengers in the back. The floor of the cubby box also has a tablet retaining feature to secure a device during charging.

INTERIOR SHOWN: E-PACE HSE WITH LIGHT OYSTER WINDSOR LEATHER SEATS WITH EBONY/LIGHT OYSTER INTERIOR AND LIGHT OYSTER HEADLINING

A smartphone holder sits between the cupholders so occupants can charge a phone while still using the cupholders. A removable lid sits on top of the cupholders to hold coins and keys and this also includes a phone retaining feature. The large glove box is great for all those essentials you want to keep close at hand. Both deep front door bins have been sculpted to carry a range of items such as phones, cans and a 1.5 litre bottle of water.

VEHICLE SHOWN: E-PACE S IN BORASCO GREY WITH OPTIONAL FEATURES FITTED (MARKET DEPENDENT)

Activity Key

Tow Hitch Assist

PRACTICALLY DESIGNED

Whatever adventure you're after, our Activity Key is the perfect companion. E-PACE also has towing capacity of up to 1,800kg and a suite of features to help make towing easier and more assured.

ACTIVITY KEY
With the optional Activity Key you can enjoy your favourite activities, and keep your car key securely in the car. For extra convenience, you can strap the Activity Key to your wrist. The wristband is robust and fully waterproof, allowing you to take part in a range of activities from cycling to swimming. Simply place your Activity Key against the sensor on the tailgate[1] to lock or unlock the car and deactivate or reactivate the conventional key fob.

ELECTRICALLY DEPLOYABLE TOW BAR
This optional system is deployed using a convenient button in the loadspace compartment, or via the Touchscreen.

TRAILER LIGHT TEST
This feature enables you to test your trailer lights without leaving your vehicle. When an optional electrically deployable tow bar is fitted, the automatic system is used to pulse the lights in a sequence, and is triggered via the Touchscreen or a button in the loadspace compartment.

TOW HITCH ASSIST
Tow Hitch Assist[2] makes coupling a trailer to the vehicle much easier by helping you visualise the hitching process. It displays the predicted path of the vehicle tow ball towards the trailer tow bar on the Touchscreen.

TOW ASSIST
Tow Assist[2] helps with reversing by predicting the trailer's direction. The system displays the predicted path of both the vehicle and the trailer as coloured trajectory lines on the Touchscreen. For precise guidelines you can even choose your trailer's width.

TRAILER STABILITY ASSIST
Trailer Stability Assist (TSA) gives you greater stability when towing. Should TSA detect a dangerous trailer sway situation is developing, it can help you regain control by gradually reducing E-PACE's speed through lowering engine power and applying the brakes individually on each side of the vehicle to control the sway.

[1]Please consult your local Jaguar Retailer for more information.
[2]Standard when tow bar is ordered in conjunction with 360° Surround Camera.

GESTURE TAILGATE

VEHICLE SHOWN: E-PACE S IN BORASCO GREY WITH OPTIONAL FEATURES FITTED (MARKET DEPENDENT)

TAKE YOUR WHOLE WORLD WITH YOU

Wherever you need to go, whatever you need to take – E-PACE is designed to carry you and your cargo effortlessly and in style.

If your hands are full, optional powered gesture tailgate* lets you open the boot hands-free. Simply present your foot under one of E-PACE's rear flanks and the tailgate opens or closes.

Longer items can easily be accommodated by a maximum loadspace width of up to 1.3 metres – making it easy for E-PACE to take a pushchair lying flat. With a boot capacity of up to 577 litres, you can easily fit two medium sized suitcases and three 'cabin carry on' sized suitcases.

Versatile 60:40 folding rear seats are standard, so you can carry items up to 1,568mm long, with one or two passengers in the back. For bulky items, like flat pack furniture, fold down the second row seats completely to create 1,234 litres of space. Optional easy-to-use rails and a divider net help increase the adaptability of loadspace stowage, and stop objects dropping onto the back seats.

*Included within HSE Specification Pack or optional.

E-PACE SPECIFICATION

Configure your vehicle at jaguar.com

This is where our E-PACE becomes your E-PACE. You have a number of choices; from selecting E-PACE or E-PACE R-Dynamic, your engine and specification pack, to exterior and interior colours, wheels and those detailed touches that make the vehicle your own. You can also design and build your perfect E-PACE on our online configurator at Jaguar.com

CHOOSE YOUR MODEL

Page 42

If you would like our designers to choose your Jaguar E-PACE features for you, turn to page 42 to see our First Edition.

If you would like to specify your own vehicle, turn to page 44 where you can compare the standard features across E-PACE and E-PACE R-Dynamic.

CHOOSE YOUR ENGINE

Page 46

You can select from a range of efficient and powerful diesel or petrol engines.

CHOOSE YOUR SPECIFICATION PACK

Page 48

To make your selection of options even easier, you have the choice of adding specification packs – S, SE or HSE.

CHOOSE YOUR

EXTERIOR

Page 50

There's a wide range of exterior options to select from; roof styles, paint colours, the exterior Black Pack and wheels – all enable you to truly express yourself.

CHOOSE YOUR

INTERIOR

Page 58

Once you've chosen your seat style, select your preferred colourway.

CHOOSE YOUR

OPTIONS & JAGUAR GEAR

Page 66

You can choose from a wealth of factory-fit options to create the exact vehicle you require. A range of accessories which your Jaguar Retailer can fit is also available.

1 CHOOSE YOUR MODEL
FIRST EDITION

Only available for the first model year, First Edition includes exclusive design details including Caldera Red paint* and 20" 6 split-spoke 'Style 6014' with Satin Grey Diamond Turned finish alloy wheels. High specification exterior features include the Black Pack and fixed panoramic roof as standard.

Inside, exclusive Ebony Windsor leather with Flame Red twin-needle contrast stitching, carpet mats and branded metal treadplates are unique to First Edition. High specification suedecloth headlining is featured throughout and the Head-up Display system also comes as standard.

First Edition includes all of the features available on R-Dynamic SE (see pages 45 and 49) plus the following as standard:

EXTERIOR FEATURES

• Fixed panoramic roof • Exterior Black Pack • 20" 6 split-spoke 'Style 6014' with Satin Grey Diamond Turned finish alloy wheels

INTERIOR FEATURES

• First Edition carpet mats • Metal treadplates with First Edition branding • First Edition Ebony Windsor leather seats (Flame Red stitch) • 18-way heated front seats with memory • Ebony suedecloth headlining • Configurable Ambient Interior Lighting • Loadspace storage rails with luggage retention kit • Additional power sockets • Head-up Display • Activity Key • Gesture tailgate • Keyless entry

DYNAMICS

• Configurable Dynamics

Search 'Jaguar E-PACE First Edition' for more details.

*Specifications described as unique to First Edition may be available separately or in combination in second and subsequent model years.

FIRST EDITION
JAGUAR

1 CHOOSE YOUR MODEL

E-PACE

E-PACE R-DYNAMIC

E-PACE AND E-PACE R-DYNAMIC STANDARD FEATURES

EXTERIOR FEATURES

Chrome side vents
Satin Black window surrounds
Heated door mirrors
Rain sensing wipers
Twin tailpipes with finishers[1]
Tailgate spoiler
Heated rear window
LED headlights
LED rear lights
Rear fog lights
Automatic headlights
3-flash lane change indicators
Approach illumination (via Remote) and follow me home lighting

WHEELS AND TYRES

17" 10 spoke 'Style 1005' alloy wheels
Tyre Repair System
Tyre Pressure Monitoring System (TPMS)

INTERIOR FEATURES

Two-zone Climate Control
Centre console cubby box
Twin front cupholders with cover
Centre console with armrest
Sunvisors with illuminated vanity mirrors
Second row air vents
Overhead lighting console

SEATING AND INTERIOR TRIM

Fabric seats
8-way manual front seats
Leather steering wheel
Morzine headlining
Light Oyster headlining
Metal treadplates with Jaguar script
60:40 split fold rear seat

DYNAMICS

All Surface Progress Control[2] (ASPC)
Hill Launch Assist
JaguarDrive Control
Electric Power Assisted Steering (EPAS)
Torque Vectoring by Braking[3] (TVbB)
Dynamic Stability Control and Traction Control
Electric Parking Brake (EPB)
Low Traction Launch[2]
Stop/Start
Push Button Start

INFOTAINMENT

10" Touch Pro
5" display with instrument panel
Remote
Jaguar Sound System – 125W
AM/FM Radio
Dynamic Volume Control
Bluetooth® connectivity
Voice control
Power sockets – 4 x 12V power and 2 x USB data and charge
ECO Driving Style Assistant
Trip Computer

DRIVER ASSISTANCE

Emergency Braking
Cruise Control and Speed limiter
Driver Condition Monitor
Lane Keep Assist
Front and Rear Parking Aid
Rear Camera

SAFETY

Anti-Lock Braking System (ABS)
Pedestrian Airbag System
Electronic Brake-force Distribution (EBD)
Emergency Brake Assist (EBA)
Front airbags, with passenger seat occupant detector
Front side airbags
Full length side window curtain airbag
Perimetric alarm and immobiliser
Customer configurable autolock
Rear ISOFIX
Power operated child locks
Seat belt reminder
Passive front head restraints

CONVENIENCE

Loadspace cover
Loadspace elasticated side strap
Loadspace light
Luggage tie-downs in loadspace
Hooks in loadspace
Loadspace storage net
Manual tailgate

E-PACE R-DYNAMIC ADDITIONAL STANDARD FEATURES

WHEN R-DYNAMIC IS SPECIFIED

R-Dynamic Body Kit (unique front bumper and a Gloss Black finish front grille)
R-Dynamic soft grain steering wheel and gearshift paddles[2]
Twin tailpipes with finishers
Ebony Sportsmesh sport seats with contrast stitching
Front fog lights
Satin Chrome side vents
Gloss Black grille with Satin Chrome surround
Bright metal pedals
Metal treadplates with R-Dynamic script
Ebony headlining

[1]Optional on 150PS and 180PS engines. [2]Automatic transmission only. [3]AWD only.

2 CHOOSE YOUR ENGINE

Configure your vehicle at jaguar.com

DIESEL

DRIVE, ENGINE PERFORMANCE AND FUEL ECONOMY

POWER (PS)		D150			D180		D240
Transmission		Manual	Manual	Automatic	Manual	Automatic	Automatic
Driveline		Front Wheel Drive (FWD)	All Wheel Drive (AWD)	All Wheel Drive (AWD)	All Wheel Drive (AWD)	All Wheel Drive (AWD)	All Wheel Drive (AWD)
Maximum power	PS/rpm	150/3,500	150/3,500	150/3,500	180/4,000	180/4,000	240/4,000
Maximum torque	Nm/rpm	380/1,750	380/1,750	380/1,750	430/1,750	430/1,750	500/1,500
Capacity	cc	1,999	1,999	1,999	1,999	1,999	1,999
No. of cylinders		4	4	4	4	4	4
Cylinder layout		In-line	In-line	In-line	In-line	In-line	In-line
PERFORMANCE							
Maximum speed	km/h (mph)	199 (124)	194 (120)	193 (120)	207 (128)	205 (127)	224 (139)
Acceleration (seconds)	0-100km/h (0-60mph)	10.1 (9.5)	10.7 (10.1)	10.5 (9.9)	9.9 (9.4)	9.3 (8.7)	7.4 (7.0)
FUEL ECONOMY							
Urban	l/100km (mpg)	5.6 (50.4)	6.0 (47.1)	6.5 (43.5)	6.0 (47.1)	6.5 (43.5)	7.2 (39.2)
Extra Urban	l/100km (mpg)	4.2 (67.3)	4.8 (58.9)	5.1 (55.4)	4.8 (58.9)	5.1 (55.4)	5.5 (51.4)
Combined	l/100km (mpg)	4.7 (60.1)	5.2 (54.3)	5.6 (50.4)	5.2 (54.3)	5.6 (50.4)	6.2 (45.6)
CO_2 Urban emissions	g/km	145	157	170	157	170	190
CO_2 Extra Urban emissions	g/km	111	125	134	125	134	146
CO_2 Combined emissions	g/km	124*	137	147	137	147	162

*When 17" alloy wheels are fitted.

D240 and P300 engines must be fitted with S, SE or HSE Specification Packs.
Manual transmission not available with SE and HSE Specification Packs.
Official EU Test Figures. For comparison purposes only. Real world figures may differ.

PETROL

DRIVE, ENGINE PERFORMANCE AND FUEL ECONOMY

POWER (PS)		**P250**	**P300**
Transmission		Automatic	Automatic
Driveline		All Wheel Drive (AWD)	All Wheel Drive (AWD)
Maximum power	PS/rpm	249/5,500	300/5,500
Maximum torque	Nm/rpm	365/1,200-4,500	400/1,200-4,500
Capacity	cc	1,998	1,998
No. of cylinders		4	4
Cylinder layout		In-line	In-line
PERFORMANCE			
Maximum speed	km/h (mph)	230 (143)	243 (151)
Acceleration (seconds)	0-100km/h (0-60mph)	7.0 (6.6)	6.4 (5.9)
FUEL ECONOMY			
Urban	l/100km (mpg)	9.5 (29.7)	9.7 (29.1)
Extra Urban	l/100km (mpg)	6.6 (42.8)	7.0 (40.4)
Combined	l/100km (mpg)	7.7 (36.7)	8.0 (35.3)
CO_2 Urban emissions	g/km	216	220
CO_2 Extra Urban emissions	g/km	150	158
CO_2 Combined emissions	g/km	174	181

3 CHOOSE YOUR SPECIFICATION PACK

S

SE

HSE

R-DYNAMIC S

R-DYNAMIC SE

R-DYNAMIC HSE

	S	SE	HSE
EXTERIOR LIGHTING			
	LED headlights with signature DRL	LED headlights with signature DRL Auto High Beam Assist (AHBA)	LED headlights with signature DRL Auto High Beam Assist (AHBA)
WHEELS			
	18" 9 spoke 'Style 9008' **When R-Dynamic is specified:** 18" 5 spoke 'Style 5048'	19" 10 spoke 'Style 1039' **When R-Dynamic is specified:** 19" 5 spoke 'Style 5049'	20" 5 spoke 'Style 5054' **When R-Dynamic is specified:** 20" split-spoke 'Style 5051' with Satin Grey Diamond Turned finish
CONVENIENCE			
	Auto-dimming interior rear view mirror Auto-dimming, power fold, heated door mirrors with approach lights	Auto-dimming interior rear view mirror Auto-dimming, power fold, heated door mirrors with memory and approach lights Powered tailgate	Auto-dimming interior rear view mirror Auto-dimming, power fold, heated door mirrors with memory and approach lights Powered gesture tailgate Keyless Entry
SEATING			
	Grained leather seats 10-way electric front seats **When R-Dynamic is specified:** Grained leather seats with contrast stitching	Grained leather seats 14-way electric memory front seats **When R-Dynamic is specified:** Grained leather seats with contrast stitching	Perforated Windsor leather seats 18-way electric memory front seats **When R-Dynamic is specified:** Perforated Windsor leather seats with contrast stitching
INFOTAINMENT			
	Navigation Pro **Connect Pro Pack** consisting of Pro Services and Wi-Fi Hotspot **Smartphone Pack** consisting of InControl Apps	Navigation Pro **Connect Pro Pack** consisting of Pro Services and Wi-Fi Hotspot **Smartphone Pack** consisting of InControl Apps Meridian™ Sound System – 380W	Navigation Pro **Connect Pro Pack** consisting of Pro Services and Wi-Fi Hotspot **Smartphone Pack** consisting of InControl Apps Meridian™ Sound System – 380W 12.3" Interactive Driver Display
DRIVER ASSISTANCE			
	Traffic Sign Recognition and Adaptive Speed Limiter **Park Pack** consisting of 360° Parking Aid, Rear Traffic Monitor and Park Assist	Traffic Sign Recognition and Adaptive Speed Limiter **Park Pack** consisting of 360° Parking Aid, Rear Traffic Monitor and Park Assist **Drive Pack** consisting of Adaptive Cruise Control with Queue Assist, High-speed Emergency Braking and Blind Spot Assist	Traffic Sign Recognition and Adaptive Speed Limiter **Park Pack** consisting of 360° Parking Aid, Rear Traffic Monitor and Park Assist **Drive Pack** consisting of Adaptive Cruise Control with Queue Assist, High-speed Emergency Braking and Blind Spot Assist

4 CHOOSE YOUR EXTERIOR

Configure your vehicle at jaguar.com

CHOOSE YOUR ROOF

Body colour roof
(standard)

Body colour fixed
panoramic roof (optional)

Black contrast roof*
(optional)

Black contrast fixed
panoramic roof* (optional)

*Not available with Santorini Black or Farallon Pearl Black exterior colours.

VEHICLE SHOWN: E-PACE R-DYNAMIC IN YULONG WHITE WITH OPTIONAL FEATURES FITTED (MARKET DEPENDENT)

CHOOSE YOUR COLOUR

Body colour: Fuji White
(Solid)

Roof colour: Black

Body colour: Yulong White
(Metallic)

Roof colour: Black

4 CHOOSE YOUR EXTERIOR

Configure your vehicle at jaguar.com

Body colour: Borasco Grey (Metallic)

Roof colour: Black

Body colour: Santorini Black* (Metallic)

Body colour: Corris Grey (Metallic)

Roof colour: Black

Body colour: Indus Silver (Metallic)

Roof colour: Black

Body colour: Firenze Red
(Metallic)

Roof colour: Black

Body colour: Farallon Pearl Black*
(Premium Metallic)

Body colour: Caesium Blue
(Metallic)

Roof colour: Black

Body colour: Silicon Silver
(Premium Metallic)

Roof colour: Black

4 CHOOSE YOUR EXTERIOR

Configure your vehicle at jaguar.com

BLACK PACK

The optional Black Pack adds a touch of drama. It includes a Gloss Black grille and surround, side vents and window surrounds. Complete the look with optional 20" 5 split-spoke 'Style 5051' alloy wheels with Gloss Black finish.

VEHICLE SHOWN: E-PACE S IN BORASCO GREY WITH OPTIONAL FEATURES FITTED

106 TCM

4 CHOOSE YOUR EXTERIOR

Configure your vehicle at jaguar.com

CHOOSE YOUR WHEELS

STANDARD AND OPTIONAL

17" 10 SPOKE 'STYLE 1005'
Standard on E-PACE

18" 9 SPOKE 'STYLE 9008'
Standard on E-PACE S

17" 10 SPOKE 'STYLE 1005'
Standard on E-PACE R-Dynamic

18" 5 SPOKE 'STYLE 5048'
Standard on E-PACE R-Dynamic S

OPTIONAL

19" 10 SPOKE 'STYLE 1039'
Standard on E-PACE SE

20" 5 SPOKE 'STYLE 5054'
Standard on E-PACE HSE

17" 10 SPOKE 'STYLE 1037'*

20" 5 SPLIT-SPOKE 'STYLE 5051'
WITH GLOSS BLACK FINISH

19" 5 SPOKE 'STYLE 5049'
Standard on E-PACE R-Dynamic SE

20" 5 SPLIT-SPOKE 'STYLE 5051'
WITH SATIN GREY DIAMOND TURNED FINISH
Standard on E-PACE R-Dynamic HSE

19" 5 SPOKE 'STYLE 5049'
WITH SATIN DARK GREY FINISH

21" 5 SPLIT-SPOKE 'STYLE 5053'
WITH SATIN GREY DIAMOND TURNED FINISH**

*Only available on D150 and D180 engines.
**Not available before April 2018. Only available when optional Adaptive Dynamics is selected.

5 CHOOSE YOUR INTERIOR

Configure your vehicle at jaguar.com

E-PACE

FABRIC

GRAINED LEATHER

WINDSOR LEATHER

E-PACE R-DYNAMIC

SPORTSMESH

GRAINED LEATHER

WINDSOR LEATHER

SELECT YOUR SEAT MATERIAL AND FUNCTIONALITY

SEAT STYLE	8-WAY MANUAL FRONT	10-WAY ELECTRIC FRONT	14-WAY ELECTRIC FRONT	18-WAY ELECTRIC FRONT
E-PACE	●	○	○	○
E-PACE R-Dynamic	●	○	○	○
MOVEMENT				
Forward/backward	Manual (2)	Powered (2)	Powered (2)	Powered (2)
Cushion height	Manual (2)	Powered (2)	Powered (2)	Powered (2)
Cushion tilt		Powered (2)	Powered (2)	Powered (2)
Cushion extension				Powered (2)
Recline	Manual (2)	Powered (2)	Powered (2)	Powered (2)
Lumbar			Powered (4)	Powered (4)
Bolsters				Powered (2)
Headrest height	Manual (2)	Manual (2)	Manual (2)	Manual (2)
FEATURES				
Driver and Passenger memory	—	—	●	●
Rear centre armrest	—	●	●	●
OPTIONAL FUNCTIONALITY				
Heated front	○	○	○	○
Heated front and rear	○	○	○	○
Heated and cooled front and heated rear	—	—	—	○
MATERIAL				
Fabric (Standard on E-PACE)	●	—	—	—
Sportsmesh (Standard on E-PACE R-Dynamic)	●	—	—	—
Grained leather	—	●	●	—
Windsor leather	—	—	—	●
AVAILABILITY				
E-PACE	●	○	○	○
S	—	●	○	○
SE	—	—	●	○
HSE	—	—	—	●

● Standard ○ Option — Not available

5 CHOOSE YOUR INTERIOR

Configure your vehicle at jaguar.com

SELECT YOUR INTERIOR COLOUR COMBINATION

	1	2	3	4	5	6
INTERIOR COLOURWAY	**STITCH**	**SEAT MATERIAL**	**HEADLINING**	**UPPER FACIA**	**MID ROLL**	**CARPET**
E-PACE						
A Ebony/Ebony	Ebony	Ebony Fabric	Light Oyster[1]	Ebony	Ebony	Ebony
B Ebony/Ebony	Ebony	Ebony Grained leather	Light Oyster[1]	Ebony	Ebony	Ebony
C Lunar/Light Oyster	Light Oyster	Light Oyster Grained leather	Light Oyster[1]	Lunar	Light Oyster	Lunar
D Ebony/Ebony	Ebony	Ebony Windsor leather	Light Oyster[1]	Ebony	Ebony	Ebony
E Lunar/Light Oyster	Light Oyster	Light Oyster Windsor leather	Light Oyster[1]	Lunar	Light Oyster	Lunar
F Ebony/Light Oyster	Light Oyster	Light Oyster Windsor leather	Light Oyster[1]	Ebony	Light Oyster	Ebony
G Ebony/Siena Tan	Siena Tan	Siena Tan Windsor leather	Light Oyster[1]	Ebony	Siena Tan	Ebony
E-PACE R-DYNAMIC						
H Ebony/Ebony	Light Oyster	Ebony Sportsmesh	Ebony[2]	Ebony	Ebony	Ebony
I Ebony/Ebony	Light Oyster	Ebony Grained leather	Ebony[2]	Ebony	Ebony	Ebony
J Ebony/Ebony	Reims Blue	Ebony Grained leather	Ebony[2]	Ebony	Ebony	Ebony
K Ebony/Light Oyster	Light Oyster	Light Oyster Grained leather	Ebony[2]	Ebony	Light Oyster	Ebony
L Ebony/Ebony	Light Oyster	Ebony Windsor leather	Ebony[2]	Ebony	Ebony	Ebony
M Ebony/Light Oyster	Light Oyster	Light Oyster Windsor leather	Ebony[2]	Ebony	Light Oyster	Ebony
N Ebony/Mars Red	Red	Mars Red Windsor leather	Ebony[2]	Ebony	Mars Red	Ebony
O Ebony/Eclipse	Reims Blue	Eclipse Windsor leather	Ebony[2]	Ebony	Eclipse	Ebony

[1]Optional Ebony headlining available. [2]Optional Light Oyster headlining available.

1
2
3
4
5
6

5 CHOOSE YOUR INTERIOR

Configure your vehicle at jaguar.com

E-PACE INTERIOR COLOUR COMBINATIONS

A. EBONY/EBONY
Interior shown: E-PACE with Ebony/Ebony interior with Ebony stitch, Ebony fabric seats and Light Oyster headlining.

B. EBONY/EBONY
Interior shown: E-PACE SE with Ebony/Ebony interior with Ebony stitch, Ebony grained leather seats and Light Oyster headlining. This interior is also available on E-PACE S.

C. LUNAR/LIGHT OYSTER
Interior shown: E-PACE SE with Lunar/Light Oyster interior with Light Oyster stitch, Light Oyster grained leather seats and Light Oyster headlining. This interior is also available on E-PACE S.

D. EBONY/EBONY
Interior shown: E-PACE HSE with Ebony/Ebony interior with Ebony stitch, Ebony Windsor leather seats and Light Oyster headlining.

E. LUNAR/LIGHT OYSTER
Interior shown: E-PACE HSE with Lunar/Light Oyster interior with Light Oyster stitch, Light Oyster Windsor leather seats and Light Oyster headlining.

F. EBONY/LIGHT OYSTER
Interior shown: E-PACE HSE with Ebony/Light Oyster interior with Light Oyster stitch, Light Oyster Windsor leather seats and Light Oyster headlining.

G. EBONY/SIENA TAN
Interior shown: E-PACE HSE with Ebony/Siena Tan interior with Siena Tan stitch, Siena Tan Windsor leather seats and Light Oyster headlining.

5 CHOOSE YOUR INTERIOR

Configure your vehicle at jaguar.com

E-PACE R-DYNAMIC INTERIOR COLOUR COMBINATIONS

H. EBONY/EBONY
Interior shown: E-PACE R-Dynamic with Ebony/Ebony interior with Light Oyster stitch, Ebony Sportsmesh sport seats and Ebony headlining.

I. EBONY/EBONY
Interior shown: E-PACE R-Dynamic SE with Ebony/Ebony interior with Light Oyster stitch, Ebony Grained leather sport seats and Ebony headlining. This interior is also available on E-PACE R-Dynamic S.

J. EBONY/EBONY
Interior shown: E-PACE R-Dynamic SE with Ebony/Ebony interior with Reims Blue stitch, Ebony Grained leather sport seats and Ebony headlining. This interior is also available on E-PACE R-Dynamic S.

K. EBONY/LIGHT OYSTER
Interior shown: E-PACE R-Dynamic SE with Ebony/Light Oyster interior with Light Oyster stitch, Light Oyster Grained leather sport seats and Ebony headlining. This interior is also available on E-PACE R-Dynamic S.

L. EBONY/EBONY
Interior shown: E-PACE R-Dynamic HSE with Ebony/Ebony interior with Light Oyster stitch, Ebony Windsor leather sport seats and Ebony headlining.

M. EBONY/LIGHT OYSTER
E-PACE R-Dynamic HSE with Ebony/Light Oyster interior with Light Oyster stitch, Light Oyster Windsor leather sport seats and Ebony headlining.

N. EBONY/MARS RED
Interior shown: E-PACE R-Dynamic HSE with Ebony/Mars Red interior with Red stitch, Mars Red Windsor leather sport seats and Ebony headlining.

O. EBONY/ECLIPSE
Interior shown: E-PACE R-Dynamic HSE with Ebony/Eclipse interior with Reims Blue stitch, Eclipse Windsor leather sport seats and Ebony headlining.

6 CHOOSE YOUR OPTIONS AND JAGUAR GEAR

Configure your vehicle at jaguar.com

EXTERIOR FEATURES AND PACKS

Full Length Roof Rails[1]
Factory-fit roof rails facilitate easy fitment of cross bars for truly stable roof carrying. Pre-set positioning points ensure cross bars are fixed in optimum position for weight distribution and dynamics. Available in Black or Silver finishes.

Privacy Glass
Darkened privacy glass lets rear seat passengers enjoy greater privacy and helps reduce glare from the sun.

LED Headlights with Signature DRL
See page 32.

Matrix LED Headlights with Signature DRL
See page 32.

Auto High Beam Assist (AHBA)
Auto High Beam Assist (AHBA) provides improved comfort and safety when driving at night. AHBA uses a forward facing camera to detect oncoming headlights and dips the main beam automatically.

Infrared Reflective Windscreen
This windscreen filters sunlight to reduce heat, and prevent UV rays from entering the cabin.

No Badges
You have the option to remove both the specification pack and engine badges from the side vents and rear of the vehicle respectively.

Twin Tailpipes with Finishers[2]
Premium performance-inspired, round integrated exhaust finishers.

Auto-dimming, power fold, heated door mirrors with memory and approach lights[3]
Improving visibility when manoeuvring, these heated door mirrors feature auto-dipping functionality when Reverse gear is selected. In addition, the door mirrors are power folding, to avoid damage during parking in confined spaces. Combined with memory seats, the mirrors are also equipped with a memory function. Once you set your ideal seating and mirror positions, it automatically recalls your preferred driving position settings. Integrated approach lights to the underside of the mirrors illuminate the ground with an eye-catching Jaguar and cub design.

Detachable Tow Bar
See page 37.

Electrically Deployable Tow Bar
See page 37.

Chrome side window surrounds
Chrome side window surrounds accentuate the stylish design of E-PACE.

Privacy Glass

Matrix LED Headlights with Signature DRL

[1]Only available when optional Fixed Panoramic Roof is fitted. [2]Standard on all E-PACE R-Dynamic models. Optional on E-PACE 150PS and 180PS engines.
[3]Only available when optional auto-dimming interior rear view mirror and leather seats are fitted. [4]Standard on R-Dynamic models.

Features and their availability may differ by vehicle specification and market. Please refer to Specification and Price Guide for details or contact your nearest Jaguar Retailer, for more information.

SELECT YOUR FACTORY-FIT OPTIONS

Options must be specified at the point of ordering your new vehicle. For full feature and option availability, please refer to the accompanying Specification and Price Guide or visit your local Jaguar Retailer.

WHEELS AND TYRES

Reduced Section Steel Spare Wheel
Reduced section steel spare wheel with vehicle jack and wheel brace. Stored under loadspace floor.

Locking Wheel Nuts
Protect your wheels with custom designed high-security chrome locking wheel nuts.

All-Season Tyres
All-Season Tyres seamlessly combine the qualities of summer and winter tyres, so you can use them all year round. They are designed for regions with moderate winters characterised by light snowfall, where temperatures rarely drop below freezing.

Locking Wheel Nuts

INTERIOR FEATURES AND PACKS

Illuminated Metal Treadplates with Jaguar Script
Illuminated aluminium treadplates, featuring Jaguar script are available on driver and front passenger sides.

Bright Metal Pedals[4]
Stainless steel Bright finish sports pedal covers are easy to fit and feature hidden fixings for a clean finish.

Configurable Ambient Interior Lighting
This feature allows you to vary the colour and shade, changing the ambience of the cabin to suit your mood. There are ten colours in total.

Timed Climate with Remote
This pre-heats the engine, channelling residual heat into the cabin, so the vehicle is warm and comfortable by the time you leave the house. It has an integrated 7-day timer, or can be used for a single event up to 16 days ahead.

Smoker's Pack
Add a lighter socket and ashtray to the centre console.

Auto-dimming Interior Rear View Mirror
See page 11.

Cabin Air Ionisation
This technology improves the air quality within the vehicle cabin, removes allergens, any viruses, airborne bacteria and associated odours. It does so by ionising particles in the air, making them attract to surfaces and thus helping to cleanse the air.

Air Quality Sensor
This extra climate control option monitors the air quality within the cabin and automatically recirculates it as necessary.

Cold Climate Pack
This offers heated washer jets, heated windscreen, soft grain leather steering wheel and heated steering wheel.

6 CHOOSE YOUR OPTIONS & JAGUAR GEAR

Configure your vehicle at jaguar.com

SEATING AND INTERIOR TRIM

Light Oyster Morzine headlining
See page 64.

Ebony Morzine headlining
See page 64.

Ebony Suedecloth headlining
Premium suedecloth headlining option.

Carpet Mats
Add a touch of luxury and protect E-PACE's floor with carpet mats.

Premium Carpet Mats
Premium carpet mats with Nubuck edging to complement E-PACE's interior styling.

Soft Grain Leather Steering Wheel
Trimmed in luxury soft grain leather, the steering wheel places a number of E-PACE's primary functions at your fingertips.

Premium carpet mats

DYNAMICS

Performance Pack[1]
This pack offers Red brake calipers and 350mm front brakes to give improved resistance to brake fade.

Adaptive Dynamics[2]
See page 15.

Configurable Dynamics[3]
See page 15.

INFOTAINMENT

Navigation Pro[4]
See page 24.

Connect Pro Pack[5]
See page 24.

Smartphone Pack
See page 25.

Meridian™ Sound System – 380W
See page 20.

Meridian™ Surround Sound System – 825W
See page 20.

Digital Audio Broadcast (DAB) Radio
DAB radio technology offers improved sound quality, a wide choice of stations and live text information about the station, show and song you are listening to.

Digital TV
Drivers and passengers can watch their favourite TV shows on the Touchscreen whenever the car is stationary.

Dual View[6]
Allows driver and passenger to see two different views on the 10" Touchscreen, enabling access to different functions at the same time.

Head-up Display
See page 19.

Interactive Driver Display
See page 19.

[1]Not available with 17" alloy wheels. [2]Not available before April 2018. Not available on D150, Manual transmission or 17" alloy wheels. [3]Not available with 150PS engine or manual transmission. [4]Must be selected with Connect Pro Pack. [5]Must be selected with Navigation Pro. [6]Must be selected with Digital TV. [7]Only available when optional auto-dimming, power fold door mirrors are fitted. [8]Only available when optional auto-dimming, power fold door mirrors are fitted. Automatic Transmission only. [9]Only available when optional Keyless Entry is fitted. [10]Only available when optional auto-dimming interior rear view mirror is selected.

Features and their availability may differ by vehicle specification and market. Please refer to Specification and Price Guide for details or contact your nearest Jaguar Retailer, for more information.

DRIVER ASSISTANCE

360° Surround Camera[7]
See page 27.

Drive Pack[8]
See page 26.

Park Pack
See page 27.

Traffic Sign Recognition with Adaptive Speed Limiter[5]
Keeps you fully informed and aware on the road, by displaying speed limits and no overtaking signs in the instrument cluster where they can easily be seen. When activated, our Adaptive Speed Limiter uses Traffic Sign Recognition information to adjust your car's speed accordingly.

Head-up Display

CONVENIENCE

Keyless Entry
Allows you to lock and unlock E-PACE without pressing a button. Simply approach the vehicle with the key fob in your pocket or bag, and unlock and disarm the vehicle using the door handle. When leaving the vehicle, you can lock E-PACE by simply pressing the button on the door handle, or by using the key fob.

Activity Key
See page 37.

Powered Tailgate
See page 38.

Powered Gesture Tailgate[9]
See page 38.

Garage Door Opener[10] **(HomeLink®)**
The HomeLink System is a universal transmitter fitted to the underside of the interior rear view mirror. This transmitter can be programmed to operate up to 3 home or office wireless controlled systems, such as garage doors, automatic gates, or security lighting.

Secure Tracker
See page 25.

Loadspace Partition Net
Designed to protect vehicle occupants against the displacement of luggage.

Loadspace Storage Rails with Luggage Retention Kit
Loadspace rails extend and adjust to secure items.

Intrusion Sensor
Uses ultrasonic sensors to detect any intrusion into the cabin area when the vehicle is locked.

Additional power sockets
Three additional USB charging points in the second row centre console.

6 CHOOSE YOUR OPTIONS & JAGUAR GEAR

Configure your vehicle at jaguar.com

SELECT YOUR JAGUAR GEAR

Jaguar Gear Accessories can be purchased through your Jaguar Retailer and added at any stage of the vehicle's life – not just when it's new. Jaguar Gear approved accessories are designed, tested and manufactured to the same exacting standards as the original equipment fitted to your vehicle.

For our full range of accessories please search 'Jaguar Gear Accessories' to view the online catalogue.

VEHICLE SHOWN: E-PACE FIRST EDITION IN CALDERA RED (MARKET DEPENDENT)

EXTERIOR ACCESSORIES

Fixed Side Steps[1 2]
The side steps aid entry and exit to the vehicle and improve access to the roof. Design features Jaguar branding and includes brushed stainless steel edge trim and a rubber tread mat, to complement the vehicle's exterior styling cues.

Bright Side Tubes[2]
Highly polished stainless steel side tubes complement the vehicle's exterior style.

Carbon Fibre Mirror Covers
High grade Carbon Fibre mirror covers provide a performance-inspired styling upgrade.

Noble Chrome Mirror Covers
Noble Chrome mirror covers accentuate the stylish design of the exterior mirrors.

Carbon Fibre Side Power Vents
High grade Carbon Fibre side power vents provide a performance-inspired styling upgrade.

Splash Guards – Front and Rear
Jaguar branded splash guards complement the lines of your vehicle, reduce spray and provide protection from dirt and stone chippings.

Stainless Steel Undershield – Front and Rear[3]
Manufactured from stainless steel, the stylish front and rear undershields feature a premium polished finish.

Fixed Side Steps

Carbon Fibre Mirror Covers

[1]Recommend to be fitted with front splash guards to protect against the build up of snow, ice or mud in extreme conditions.
[2]Fitment may affect the all-terrain capability of the vehicle. [3]Rear undershield not available with towing systems.

6 CHOOSE YOUR OPTIONS & JAGUAR GEAR

Configure your vehicle at jaguar.com

INTERIOR ACCESSORIES

Luxury Carpet Mats[1]
Luxurious, tailored 2,050g/m² pile front carpet mats with embossed Jaguar logo and Nubuck edge binding. The premium mats provide a well appointed finishing touch to the interior.

Rubber Mats[1]
Hard wearing Jaguar branded rubber mats provide added protection for your vehicle's carpets.

Luggage Compartment Luxury Carpet Mat with Bumper Protector
Luxurious soft luggage mat with Jaguar logo. Deep premium 2,050g/m² pile with Nubuck edging. Integrated with a bumper liner, which provides protection to the bumper from scuffs and scratches as well as preventing clothing from collecting dirt when loading and unloading. The liner can be stowed under the mat when not in use.

Luggage Compartment Rubber Mat
This premium mat is tailored specifically to protect the luggage compartment. Light and durable, it is easily removable for cleaning.

Aperture Retention Net
The aperture retention net prevents small items from falling out of the loadspace when the tailgate is opened and maximises packing space. Manufactured from premium lightweight materials including high grade machined aluminium to ensure robust quality.

Luggage Compartment Partition[2]
The luggage compartment partition is designed to prevent cargo from entering the passenger compartment.

Luggage Compartment Rails
Luggage compartment rails with sliding 'D' loops, locking system and receiver, help increase the flexibility of loadspace stowage and also allow fitment of the luggage compartment retention kit.

Gearshift Paddles – Aluminium[3]
Enhancement steering wheel gearshift paddles offered in a premium aluminium material providing a high quality finish. Manufactured from high quality machined aluminium, the paddles are hand brushed for a premium finish and anodised to ensure they will not deteriorate with wear.

Sport Pedal Covers
Made from stainless steel and rubber, the pedal kit fits securely over existing pedals for a contemporary, sporting appearance.

Personalised Sill Treadplates – Illuminated
Elegantly styled stainless steel sill treadplate finisher for driver or passenger doors. Illuminate when either the driver or passenger doors are opened. Highlighted by soft Phosphor Blue lighting. Allows customer to specify a monochrome 'motif' in a choice of approved typefaces/scripts.

Aluminium Gearshift Paddles

Personalised Sill Treadplates – Illuminated

[1]Not compatible with vehicles fitted with a fire extinguisher. [2]Not compatible with luggage compartment partition net. [3]Only available on R-Dynamic vehicles fitted with Automatic transmission. [4]Load capacity will differ depended on cross bar selected, contact your nearest Jaguar Retailer, for more information. [5]Roof rails are a line fit option and not available as accessory. [6]Only available when accessory Cross Bars are selected. [7]Part fitment varies depending on bike size, contact your nearest Jaguar Retailer, for more information. [8]iPhone® is a registered trademark of Apple Inc., registered in the US and other countries. Contact your nearest Jaguar Retailer, for more information on iPhone compatibility. [9]Required for Click and Go accessories to be selected. [10]Only available when optional Click and Go – Base is selected.

TOURING ACCESSORIES

Roof Cross Bars[4] [5]
Cross bars enable the use of a wide range of roof carrying accessories. They feature a unique release mechanism allowing for them to be easily fitted or removed without the use of tools. Cross bar options offered for vehicles with and without roof rails[5].

Ski/Snowboard Holder[6]
A safe and secure Jaguar branded system for transporting winter sports equipment. Incorporates slider rails for easy loading.

Roof Sport Box[6]
Spacious 320 litre capacity lockable roof box designed for sports equipment, measuring 206 x 84 x 34cm.

Roof Mounted Cycle Carrier[6] [7]
An easy to fit, roof mounted, lockable cycle carrier which carries one bike per holder. A maximum of three holders can be fitted.

Roof Mounted Cycle Carrier

OTHER ACCESSORIES

iPhone® Connect and Charge Dock[8]
The iPhone connect and charge dock has been designed to allow visibility of the phone whilst charging, utilising the cupholder space in the central console. When connected, the iPhone's media is accessible and has the ability to be controlled via the integrated infotainment / audio system. The 'cut-out' design of the holder is such that the home button is also accessible for use when parked. The iPhone USB charger can be easily disconnected if the USB connection is required for other use.

Click and Go Base[9]
The Click and Go range is a multi-purpose seat–back system for second row passengers. The versatile Click and Go Base fixes between the headrest mountings and further attachments can be added to hold tablets, bags and shirts or jackets. Each attachment is sold separately. The base can be easily removed when not in use.

Click and Play[10]
Click and Play is a removable tablet holder attachment which is available for various tablets, and can be easily positioned in multiple angles for in cabin comfort and rear seat entertainment.

Sunshades – Rear and Side
Easy to install and remove, these clip-in sunblinds fold for convenient stowage. Supplied with Jaguar branded stowage bag.

Centre Armrest Cooler/Warmer Box
Food and drinks chiller and warmer that acts as a rear centre armrest. With a leather-covered top, it is held in place by the centre seat belt and powered from the rear auxiliary socket. Ideal for long journeys with the family.

Centre Armrest Cooler/Warmer Box

TECHNICAL DETAILS

Configure your vehicle at jaguar.com

Vehicle Height
With roof rails 1,647mm
With roof antenna 1,649mm

Headroom
Maximum front headroom with
Fixed Panoramic roof fitted 996mm
Rear headroom 970mm

Legroom
Maximum front legroom 1,018mm
Maximum rear legroom 892mm

Loadspace Capacity
Rear seats upright
Height 748mm, Width 1,311mm
Loadspace volume 577 Litres*
Loadspace width between arches 1,057mm
Length at floor 806mm

Rear seats down
Height 748mm, Width 1,311mm
Loadspace volume 1,234 Litres*
Loadspace width between arches 1,057mm
Length at floor 1,568mm

Turning Circle
Kerb-to-kerb 11.4m
Wall-to-wall 11.9m
Turns lock-to-lock 2.31

	DIESEL			DIESEL		DIESEL	PETROL	PETROL
ENGINE	**D150**			**D180**		**D240**	**P250**	**P300**
Drivetrain	FWD	AWD	AWD Auto	AWD	AWD Auto	AWD Auto	AWD Auto	AWD Auto
Bore (mm)	83	83	83	83	83	83	83	83
Stroke (mm)	92.35	92.35	92.35	92.35	92.35	92.35	92.3	92.3
Compression ratio (:1)	15.5	15.5	15.5	15.5	15.5	15.34	10.5 +/-0.5	10.5 +/-0.5
BRAKES								
Front type	Ventilated disc	Ventilated disc	Ventilated disc	Ventilated disc	Ventilated disc	Ventilated disc	Ventilated disc	Ventilated disc
Front diameter (mm)	325	325	325	325	325	349	325	349
Rear type	Solid disc	Solid disc	Solid disc	Solid disc	Solid disc	Solid disc	Solid disc	Solid disc
Rear diameter (mm)	300	300	300	300	300	300	300	300
Park Brake	Electric Park Brake (EPB) integrated into brake caliper							
WEIGHTS (KG)[1]								
Weight (EU Unladen)	1,775	1,831	1,843	1,831	1,843	1,926	1,832	1,894
Gross Vehicle weight	2,320	2,400	2,400	2,400	2,400	2,420	2,400	2,400
Maximum mass on each axle (front)	1,300	1,300	1,320	1,300	1,320	1,340	1,300	1,320
Maximum mass on each axle (rear)	1,145	1,200	1,200	1,200	1,200	1,200	1,200	1,200
TOWING (KG)								
Unbraked trailer	750	750	750	750	750	750	750	750
Maximum towing	1,600	1,800	1,800	1,800	1,800	1,800	1,800	1,800
Maximum coupling point/nose weight	100	100	100	100	100	100	100	100
Maximum vehicle and trailer combination/Gross Train weight	3,920	4,200	4,200	4,200	4,200	4,200	4,200	4,200
ROOF CARRYING (KG)								
Maximum roof load (including roof rails)	75	75	75	75	75	75	75	75
PERFORMANCE								
Maximum speed km/h (mph)	199 (124)	194 (120)	193 (120)	207 (128)	205 (127)	224 (139)	230 (143)	243 (151)
Acceleration 0-100km/h (0-60mph) secs	10.1 (9.5)	10.7 (10.1)	10.5 (9.9)	9.9 (9.4)	9.3 (8.7)	7.4 (7.0)	7.0 (6.6)	6.4 (5.9)
Fuel tank capacity – usable (litres)	55.7	55.7	55.7	55.7	55.7	55.7	68.5	68.5
CO_2 Combined emissions (g/km)	124**	137	147	137	147	162	174	181
Diesel Particulate Filter (DPF)[2]	●	●	●	●	●	●	—	—

● Standard — Not Available

*When Tyre Repair System is fitted.
**When 17" alloy wheels are fitted.

[1]Weights reflect vehicles to standard specifications. Optional extras increase weight.
[2]Market dependent.

VEHICLE SHOWN: E-PACE R-DYNAMIC SE IN YULONG WHITE WITH OPTIONAL FEATURES FITTED (MARKET DEPENDENT)

SPECIAL VEHICLE OPERATIONS

Special Vehicle Operations (SVO) designs and engineers products that amplify Jaguar and Land Rover core brand values; focusing on luxury, performance and capability.

Our team of specialists is completely focused on enhancing and personalising our relationship with our most discerning and enthusiastic customers – delivering experiences that our customers will love for life.

SVO is responsible for the creation of a suite of halo products that showcase the pinnacle of Jaguar design and engineering capabilities, enabling our customers to indulge their passion for spectacular new vehicles.

THE NEW SVO TECHNICAL CENTRE

In the heart of the British Midlands is SVO's brand new Technical Centre. This state-of-the-art facility represents a £20m investment by Jaguar Land Rover, and features four zones designed to support the creation of truly breath-taking vehicles. In addition to the Commissioning and Presentation suites, our manufacturing centre is responsible for the assembly and hand-finishing of SVO halo and Collector's Edition vehicles, and a world-class paint facility ensures an exquisite finish for every car we create.

BESPOKE BY SVO

Bespoke by SVO was born out of an innate understanding of what our most discerning clients value more than anything else – to own something completely unique to them. Something only they can have, reflecting who they are and what they hold most dear. With that in mind, SVO developed innovative Commissioning and Presentation suites enabling creation of the most refined and luxurious vehicles in the world. This special new facility is housed within the new SVO Technical Centre in Warwickshire, England.

PROJECT 7

THE WORLD OF JAGUAR

Choose E-PACE and you're joining the exciting World of Jaguar.

ICE DRIVE EXPERIENCES

Take your driving to the next level with the Jaguar Land Rover Ice Drive Experience. From 2017, we are offering an adventure in Arjeplog, Sweden, that will test and develop your performance driving skills in extreme conditions. It's a rare chance for owners and enthusiasts to tackle some of the harshest and most challenging tracks on earth, under the skilled guidance of our experts. Our driving instructors are of the highest calibre and will be with you every step of the way – ready to impart years of driving wisdom. You will dance on ice, glide around some of the most awe-inspiring corners imaginable and realise the true exhilarating potential of Jaguar and Land Rover.

If you'd like to be part of the next adventure, find out more by visiting jaguar.com/experience-jaguar/iconic-experiences

FORMULA E

Jaguar's reputation for performance, technology and design was forged by the world's most challenging circuits and championships. From Le Mans to Formula 1, and now Formula E, the grid is our test-bed. Formula E provides the perfect proving ground for electric vehicle technology in a high performance environment. The racing series accelerates the development of Jaguar's electric powertrains. With every race, Formula E helps Jaguar engineers create better electric vehicles.

BEHIND THE SCENES

Our factory tours give you the unique opportunity to experience the whole process of how our cars are brought to life – from the moulding of sheet metal to those intricate final touches. At our state-of-the-art production facilities, you'll get to see how skilled technicians and sophisticated machines work seamlessly together to perfect some of Jaguar's most breathtaking cars.

Find out more at jaguar.com/experience-jaguar/behind-the-scenes

TRACK DAYS

There's no better way to get to know Jaguar than by taking a drive. The Jaguar Experience offers a range of unique opportunities to really find out what it feels like to get the most out of a Jaguar. Our track experiences allow you to push yourself and cars from the incredible Jaguar range to the limit.

Find out more by visiting jaguar.com/experience

JAGUAR COLLECTION

The latest range from the Jaguar Collection has been crafted with the same design execution and attention to detail that goes into all of our cars. This is evident in our clothing range, premium leather items and luxury travel goods. To celebrate Jaguar's heritage, we also have a collection that honours past achievements and features race inspired gift items and apparel.

To find out more, visit the online shop at www.jaguar.com/shop

THE JAGUAR MAGAZINE

This is our own vibrant, cosmopolitan and contemporary magazine. Produced by a team of enthusiastic designers and feature writers, it goes behind the scenes at Jaguar as well as providing insight into the world of luxury, design, style and travel. You can enjoy Jaguar Magazine twice a year completely free of charge for the first three years. Ask your Jaguar Retailer to ensure that you receive your copy.

TURN OFF
The Superhighway
AND ONTO
The Highway
What ARE YOU Waiting FOR?
You Don't NEED A MAP When You Have A PLAN
Only Look Back TO SEE How Far YOU'VE COME
106 TCM

AT YOUR SERVICE

As well as providing a range of exclusive services and lifestyle products, the World of Jaguar makes owning and driving carefree and easy.

JAGUAR CARE*

E-PACE is offered with a 100,000km limited mileage, three year warranty and three years' standard servicing programme. We call this programme Jaguar Care. It makes E-PACE's overall cost of ownership one of the lowest in its class. To find out more about E-PACE's Jaguar Care programme, please go to jaguar.com/jaguarcare

GENUINE PARTS

Jaguar Genuine Parts are designed, tested and manufactured to our uncompromising standards for quality, fit and durability. Each part is engineered specifically for your E-PACE to contribute to optimum performance and to help maximise its lifespan.

FLEET & BUSINESS

Jaguars are dynamic and distinctive cars that help companies express the unique character and personality of their business. We are committed to providing customer-focused aftersales services, ensuring that every Jaguar performs to the highest standard and in the most cost-efficient way for businesses. Visit jaguar.com/fleet-and-business for more information.

JAGUAR ASSISTANCE

Jaguar Assistance provides assistance in motoring emergencies, from immobilisation due to breakdown or accident to minor problems such as punctures. You can rely on our roadside assistance, whatever the situation, wherever you happen to be.

JAGUAR FINANCIAL SERVICES

New or used, for personal or business use, we have a finance option that puts you in complete control. Please speak to your local Jaguar Retailer to find out more.

INSURANCE

E-PACE's key components are easily accessible for time-efficient service and repair costs. With a focus on lower repair costs, E-PACE delivers competitive insurance group ratings. To find out more about the compelling business case for E-PACE, please contact your local Jaguar Retailer.

IMPORTANT NOTICE

Jaguar Land Rover Limited is constantly seeking ways to improve the specification, design and production of its vehicles and alterations take place continually. While every effort is made to produce up-to-date literature, this brochure should not be regarded as an infallible guide to current specifications, nor does it constitute an offer for the sale of any particular vehicle. Distributors and Retailers are not agents of Jaguar Land Rover Limited by any express or implied undertaking or representation. Comparisons are based on manufacturer's own data and testing prior to publication.

COLOURS

The colours reproduced here are subject to the limitations of the printing process and may therefore vary slightly from the actual vehicle. The company reserves the right to alter or withdraw any colour finish without notice. Some of these colours may not be obtainable in your country. Please check availability of colours and current specifications with your Jaguar Retailer. Distributors and retailers are not agents of Jaguar Land Rover Limited and have absolutely no authority to bind Jaguar Land Rover Limited to any express or implied undertaking or representation.

ENVIRONMENTAL INNOVATION AT JAGUAR

Jaguar is committed to reducing dependency on fossil fuels, using fewer natural resources and creating less waste as part of our approach to responsible and sustainable business development.

Search 'Jaguar Environmental Innovation' for more details.

*Selected European Markets only.

Castrol EDGE Professional exclusively recommended by Jaguar.

Meridian is the registered trademark of Meridian Audio Ltd.
The Bluetooth® word mark and logos are owned by the Bluetooth SIG, Inc. and any use of such marks by Jaguar Land Rover Limited is under license. iPhone is a trademark of Apple Inc., registered in the US and other countries. The navigation system must always be used in conditions that will not affect the driver's ability to drive safely or affect the safety of other road users.

VEHICLE SHOWN FRONT AND BACK COVER: E-PACE FIRST EDITION IN CALDERA RED (MARKET DEPENDENT)

VEHICLE SHOWN LEFT: E-PACE S IN BORASCO GREY WITH OPTIONAL FEATURES FITTED (MARKET DEPENDENT)

Jaguar Land Rover Limited
Registered Office: Abbey Road, Whitley,
Coventry, CV3 4LF, United Kingdom

Registered in England Number: 1672070

jaguar.com

1X5401810000BXXCS01P

130 HPS